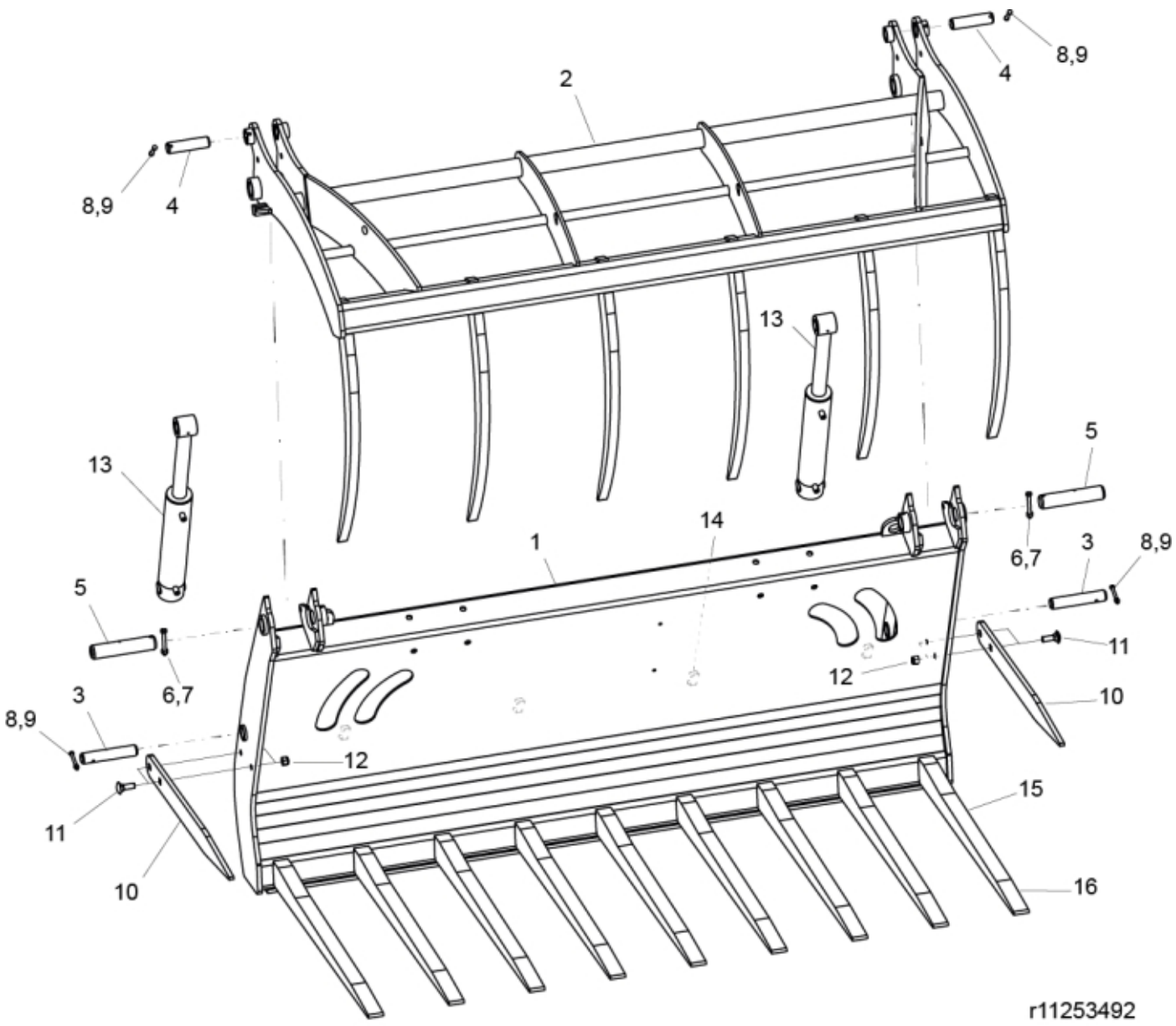
8,9
4
2
8,9
4
13
13
5
14
1
6,7
3
8,9
5
11
12
6,7
3
10
8,9
12
15
11
10
16
r11253492

© 2025 Jost

Part assemblies	Silograb HDX 24,21 JCB Qfit
Specification	Year From: 1/1/2016 12:00:00 AM
	Year To: 12/31/2019 12:00:00 AM

PartNo	Pos	Qty	Name	Specifications
60050094	1	1 PCS	Frame	with tines
60050098	2	1 PCS	Grab head	
60050101	3	2 PCS	Pin	Ø35-en8 x184
60050102	4	2 PCS	Pin	Ø35-en8 x138
60050090	5	2 PCS	Pin	44,45x212
5002092	6	2	Screw	M6S M10x80 (8.8)
5011554	7	2	Nut	Loc-King M10
5002057	8	4 PCS	Screw	M6S M8x70
5011553	9	4	Nut	M6M M8 Loc-king
60050104	10	2 PCS	Side tine	
5050305	11	4	Screw	M16x50CB
5011557	12	4	Nut	Loc-King M16
60050105	13	2 PCS	Cylinder	
60050108			• Seal kit	
60050092	14	4 PCS	Hose clamp cpl.	
60050197	15	9 PCS	Tine	B type 50mm Hardox
60050167	16	9 PCS	Tip	Tip 50 mm
60004287	17	1 PCS	Decal, Brand	Silograb HDX

© 2025 Jost