M 60002021

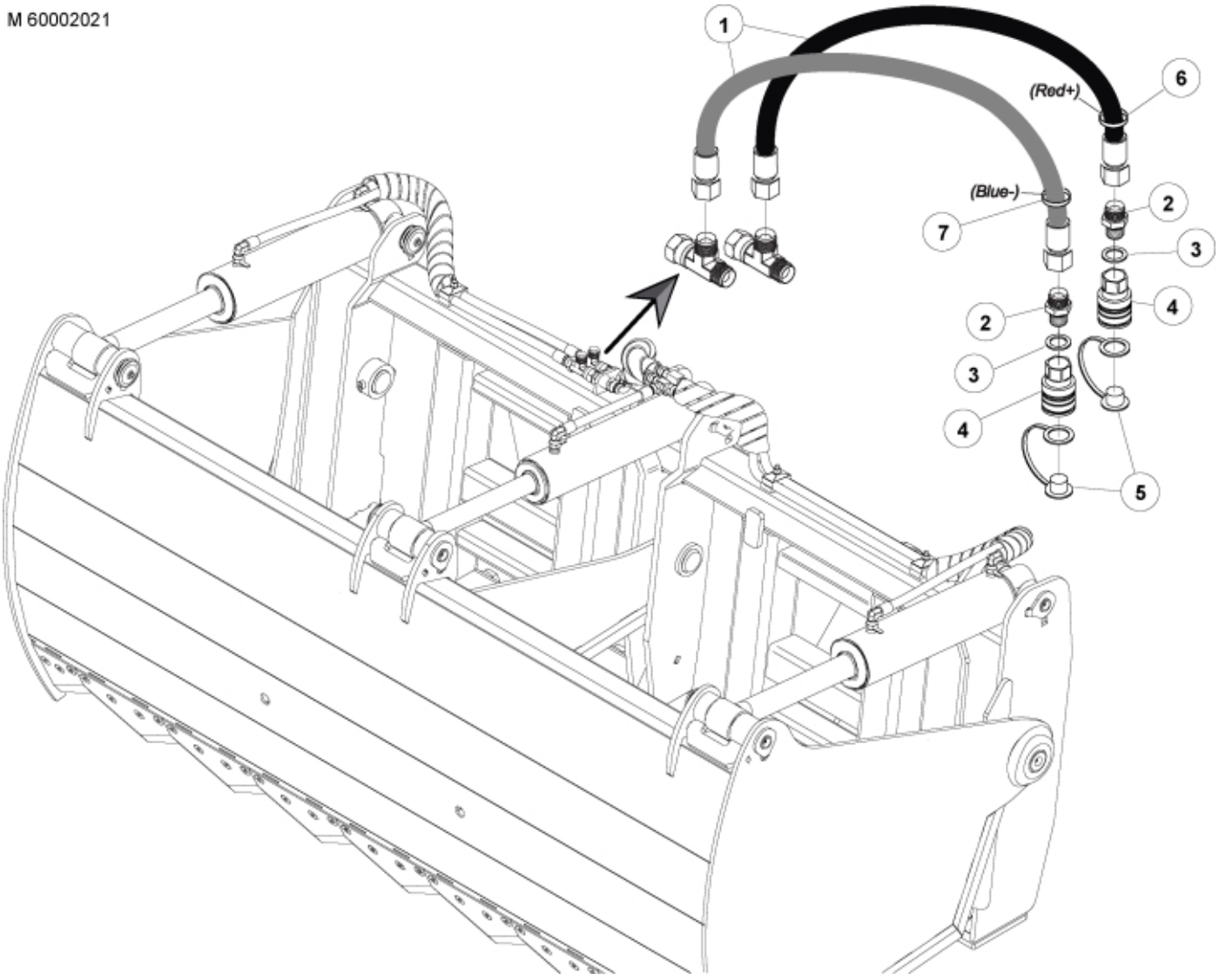

© 2025 Jost

Part assemblies Hose kit BM

PartNo	Pos	Qty	Name	Specifications
60002021		1 PCS	Hose kit BM	
11261413		1	Hydraulic hose cpl.	
1103243	1	1	• Hose	1/2"
1120065	2	1	• Adaptor	R 3/4" - R 1/2"
5013611	3	1	• Copper Washer	
5044152	4	1	• Coupling	
5044155	5	1	• Dust Cover	
5022177	6	1	Cable tie	Red
5022179	7	1	Cable tie	Blue

© 2025 Jost