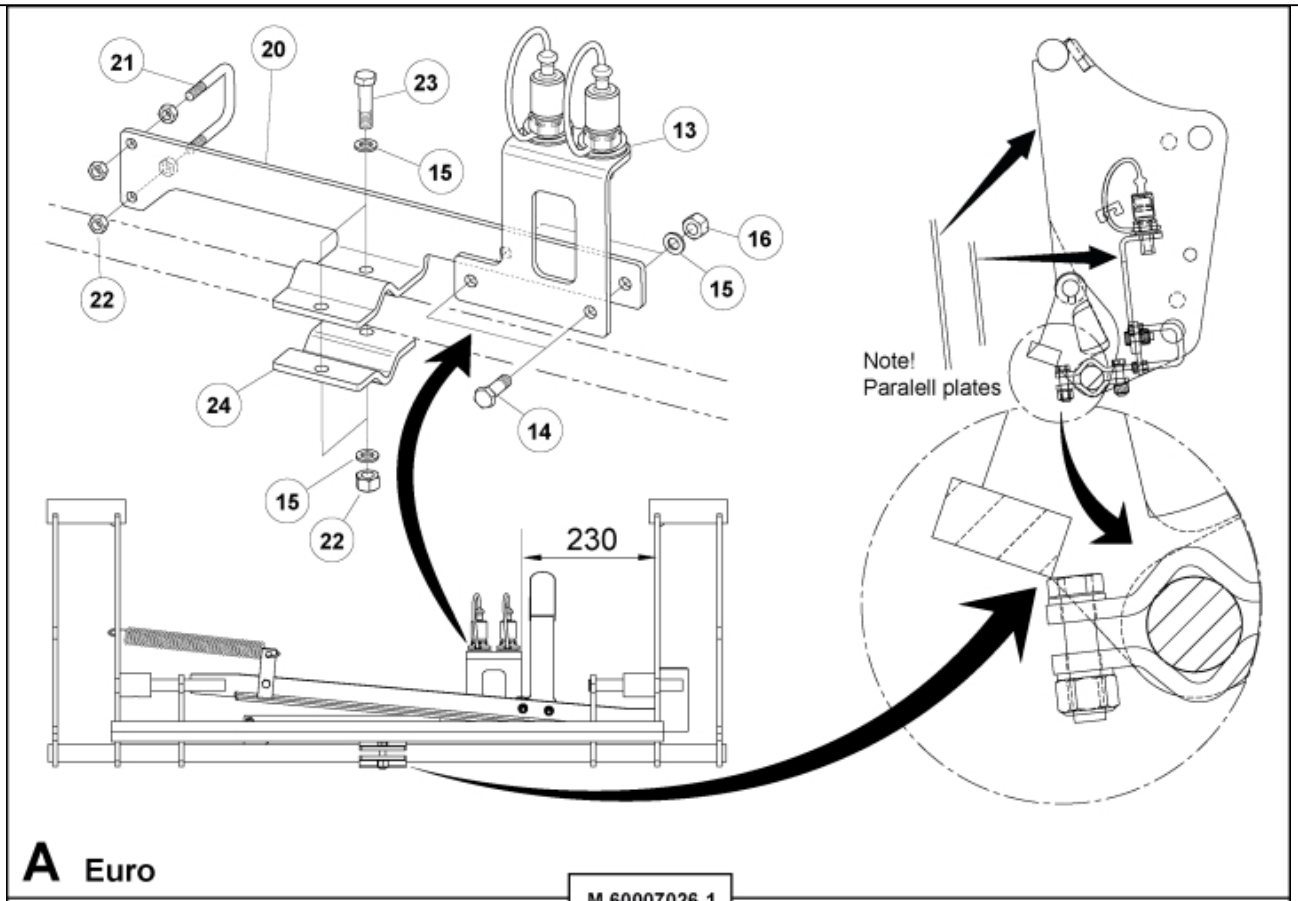

A Euro

M 60007026-1

B Skid Steer

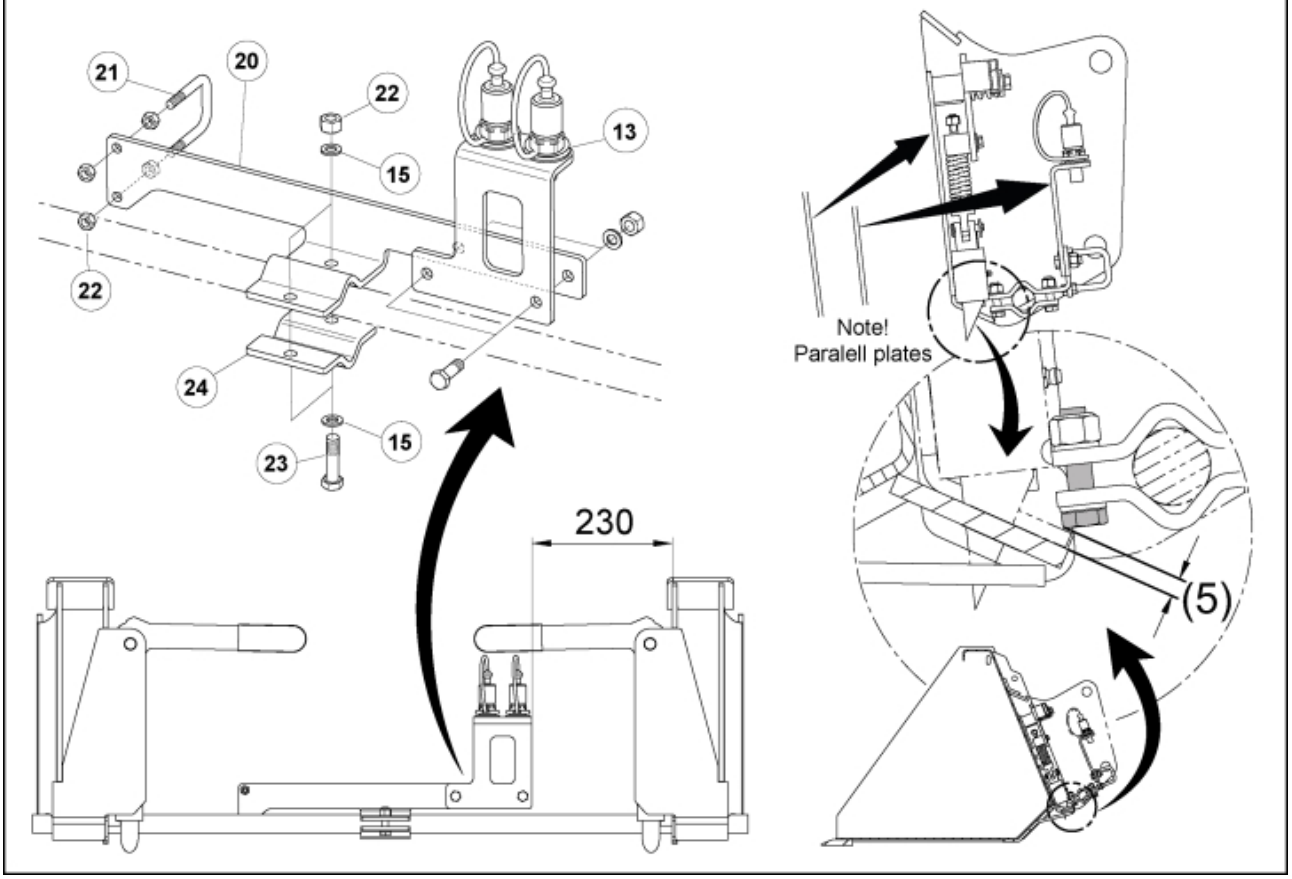

© 2025 Jost

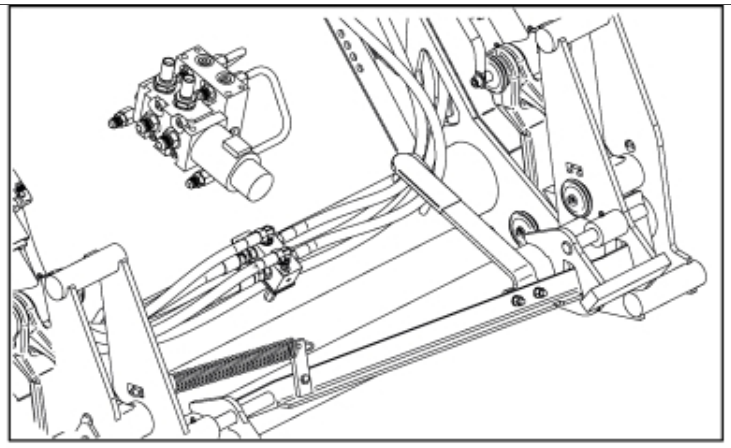

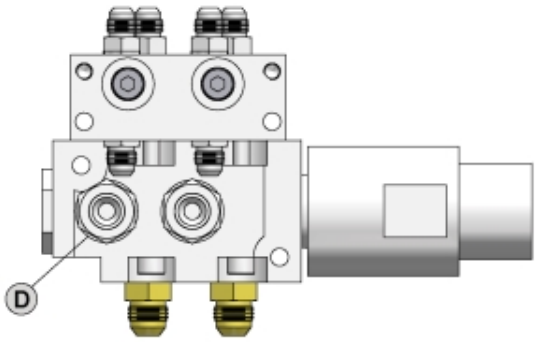

M 60007026-2

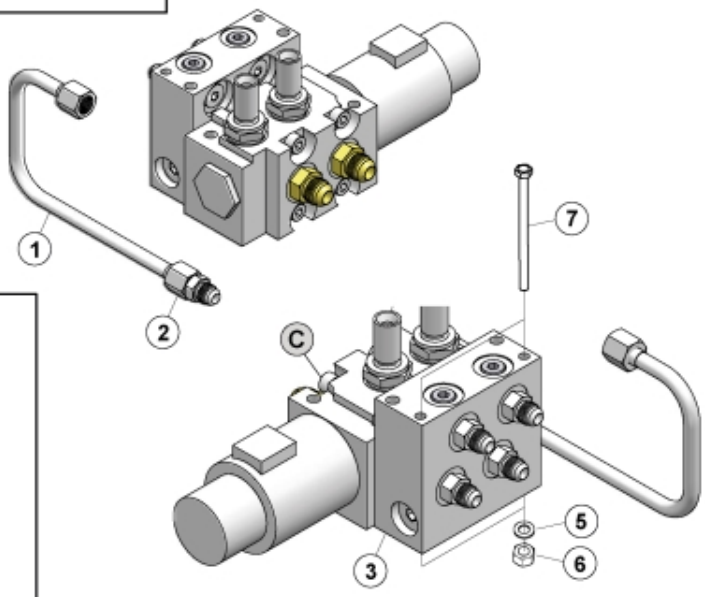

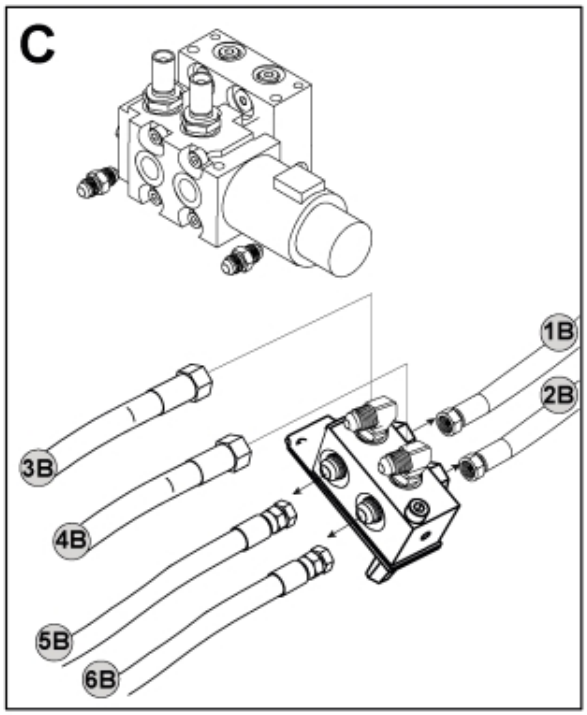

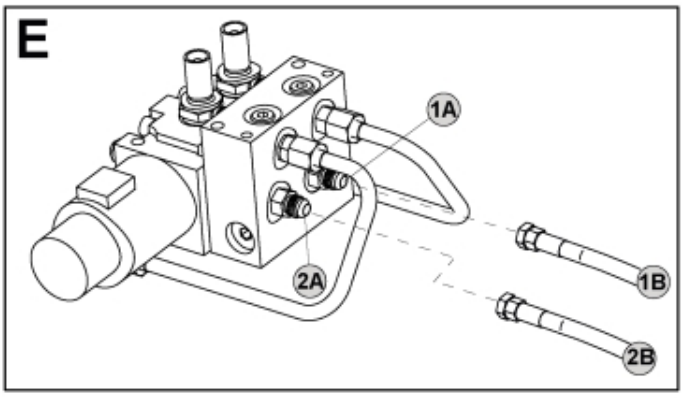

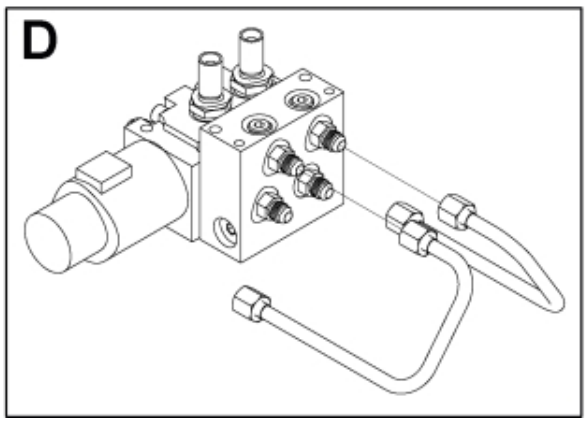

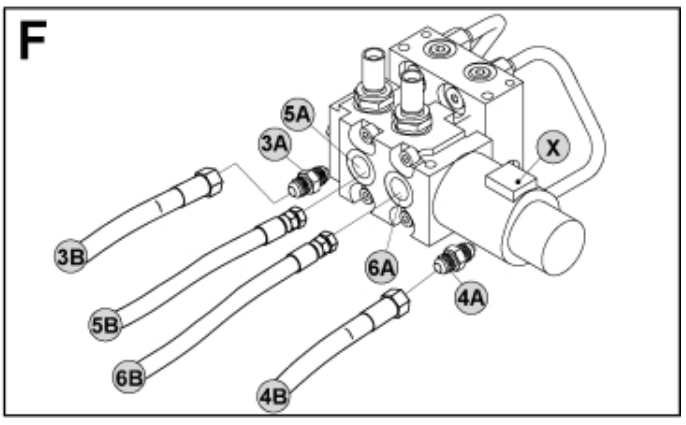

© 2025 Jost

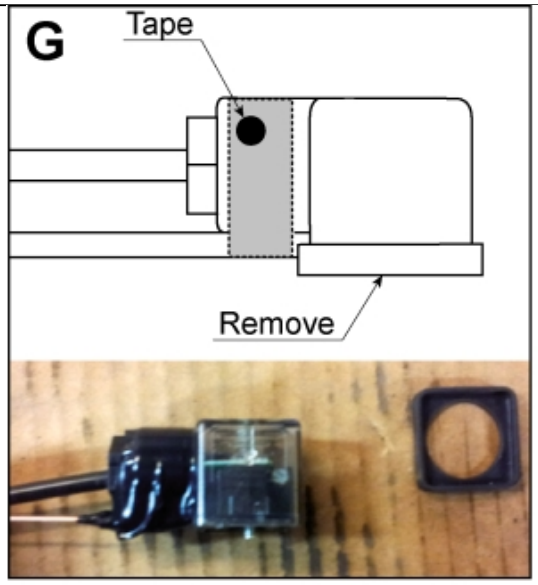

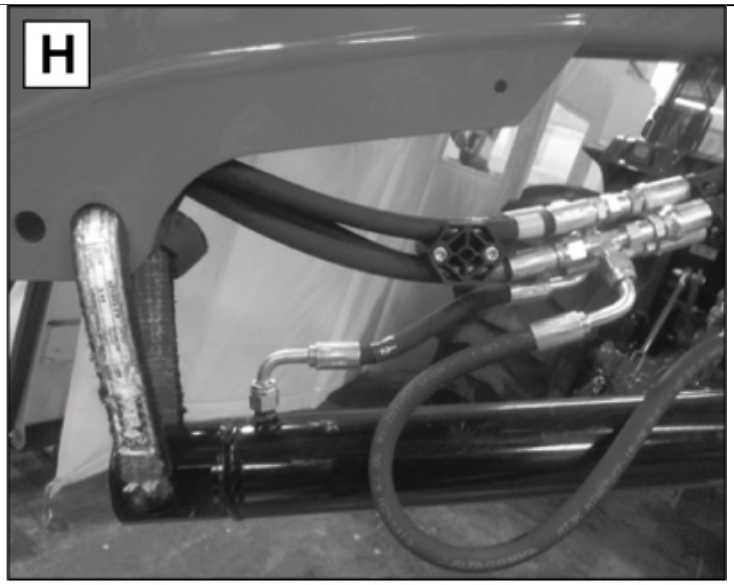

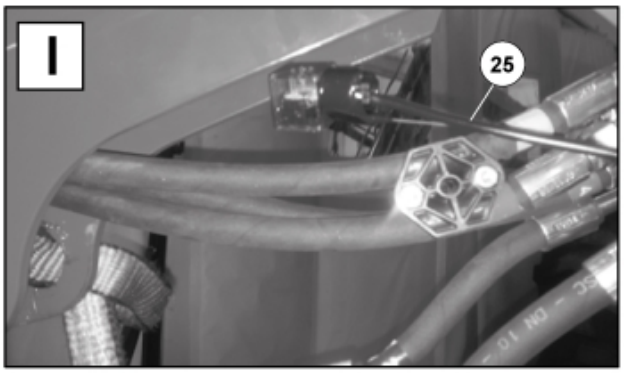

M 60007026-3

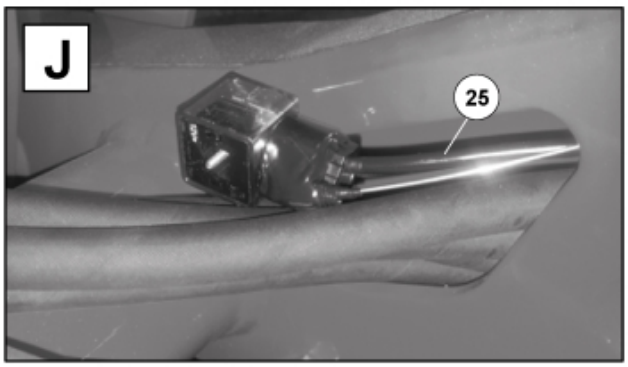

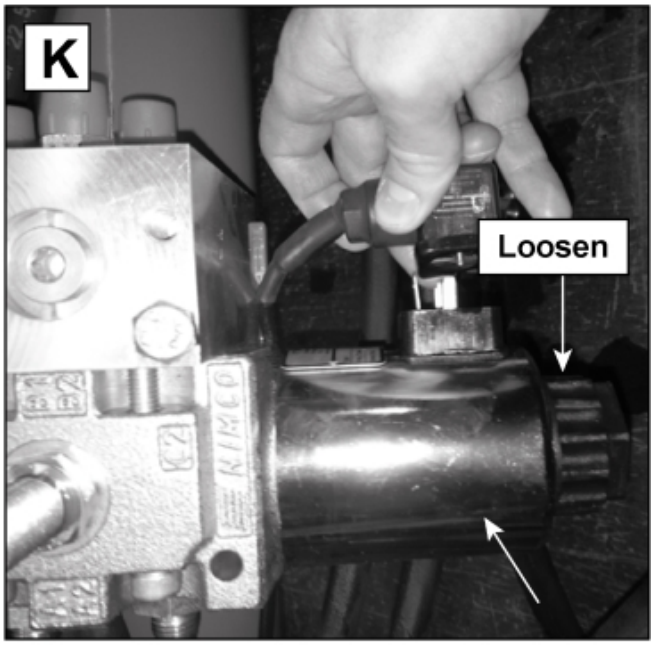

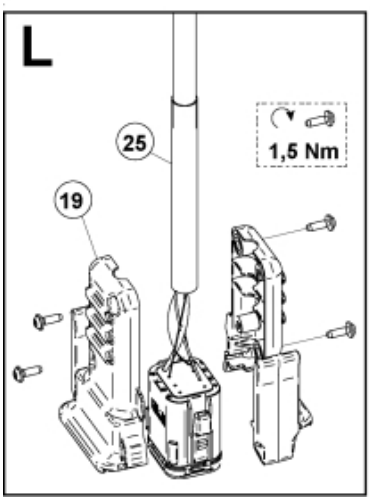

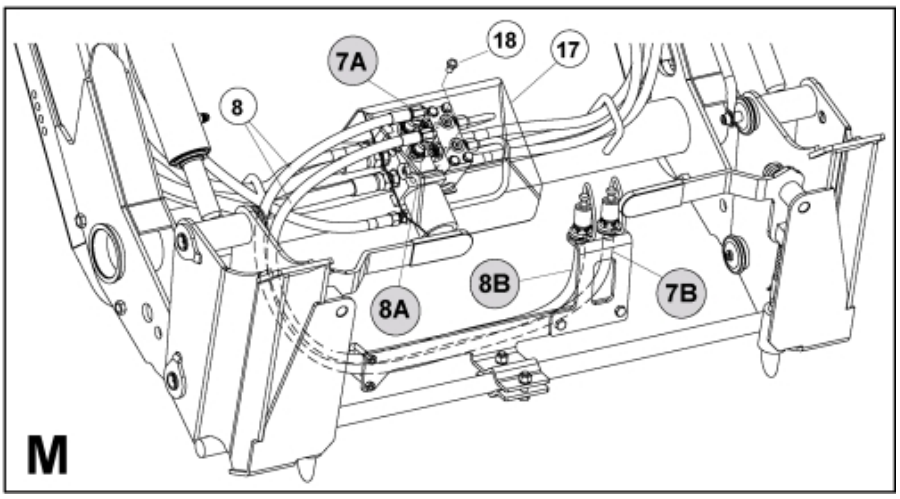

© 2025 Jost

Part assemblies	3rd service - Wire NSL (Nimco)
Specification	Year To: 1/31/2016 12:00:00 AM

PartNo	Pos	Qty	Name	Specifications
60007026		1	3rd service - Wire NSL (Nimco)	1/31/2016 12:00:00 AM
10550445		1 PCS	Control valve	
5222581	1	2	• Oil pipe	
5028109	2	2	• Adaptor	JIC 9/16"
4500757	3	1 PCS	• Control valve	Replaces 5221389
5028262	4	2	• Adaptor	
5013101	5	1	• Washer	BRB 8,4 x 16
5011553	6	1	• Nut	M6M M8 Loc-king
5002978	7	2	• Screw	M6S 8x129
1103117	8	2	Hose	3/8"
5222579	13	1	• Bracket kit	
5022157		1	• Washer, red	
5022159		1	• Washer, blue	
5044129		2	• Dust Cover	1/2" Male
5044940		2	• Coupling	ISO-A 1/2" Male - G3/8
5222580		1	• Bracket	
5002077	14	2	Screw	M6S 10x30
5013102	15	6	Washer	BRB 10 x 18 x 2
5011554	16	4	Nut	Loc-King M10
60009571	17	1	Protection plate	Replaces 5221270
5002060	18	2	Screw	M6S M8x12 (8,8)
5103054	19	1	Connector handle	
60006545	20	1 PCS	Bracket	
10413486	21	1 PCS	U-bolt	
5011053	22	4	Nut	M6M M8
5002078	23	2	Screw	M6S 10x40 (8.8)
60006548	24	1 PCS	Bracket	
5102206	25	1	Harness	8-pin Deutsch

© 2025 Jost