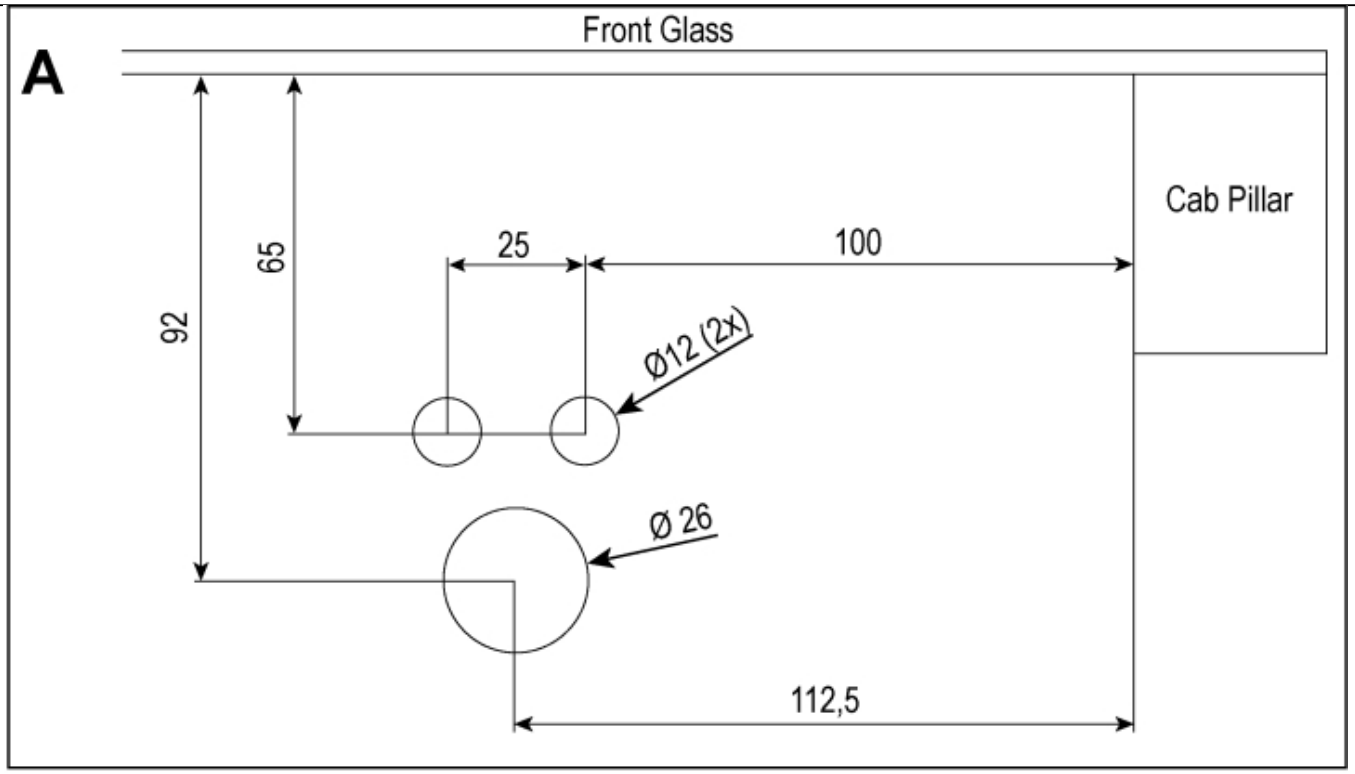

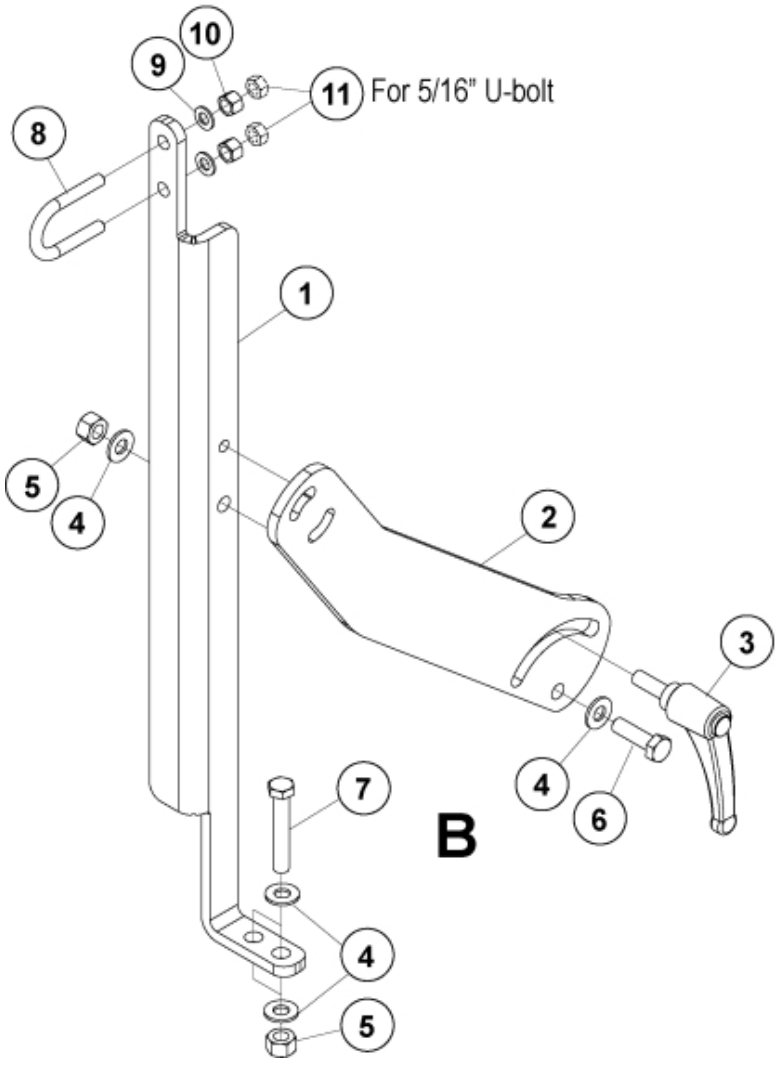

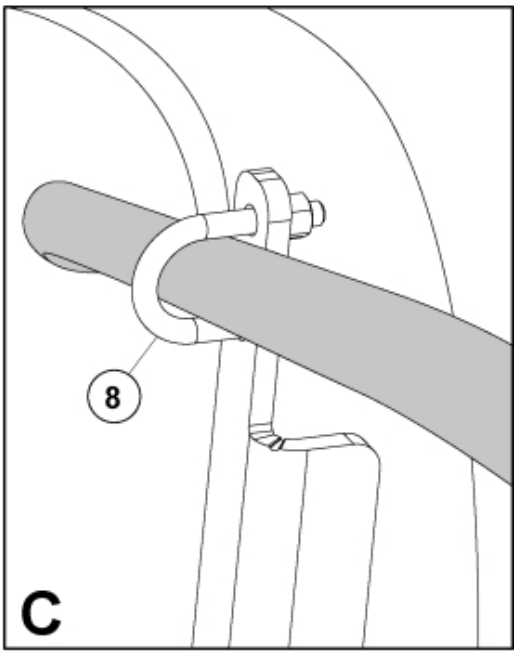

M60007293

© 2025 Jost

Part assemblies Joystick bracket

PartNo	Pos	Qty	Name	Specifications
60007293		1 PCS	Joystick bracket	
60006659	1	1	Plate	
10411885	2	1	Plate	
5022133	3	1	Knob	
5013110	4	6	Washer	BRB 10.5x22x2
5011554	5	3	Nut	Loc-King M10
5002084	6	1	Screw	M6S 10 x 35
5002080	7	2	Screw	M6S 10 x 60
5050237		1	U-bolt	
5050236	8	1	• U-bolt	
5013101	9	2	• Washer	BRB 8,4 x 16
5011553	10	2	• Nut	M6M M8 Loc-king
5011003	11	2	• Nut	U6M UNC 5/16

© 2025 Jost