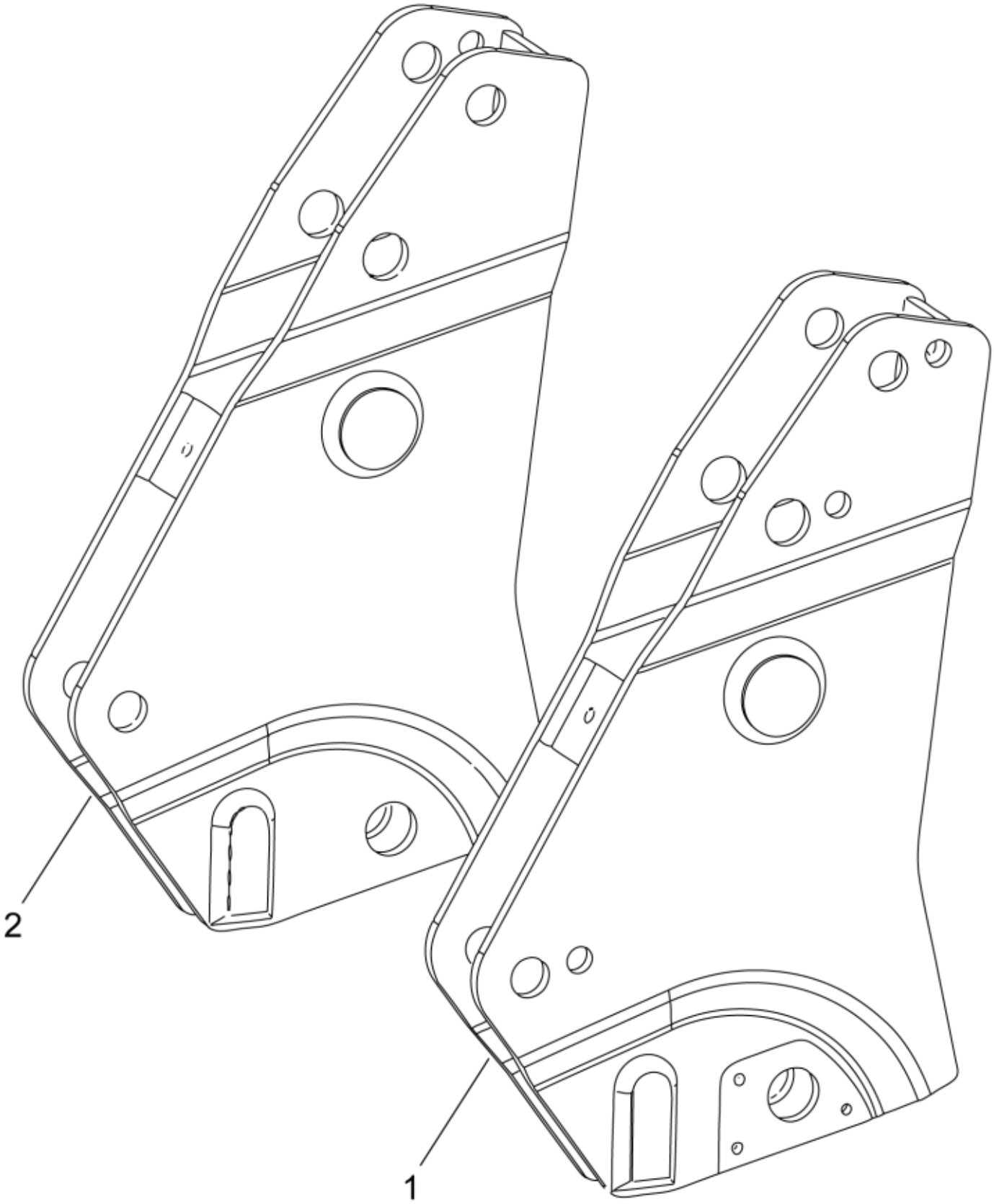

r5212513_5212523

© 2025 Jost

Part assemblies	Bearing boxes	
Specification	Specification: Fendt Green	

PartNo	Pos	Qty	Name	Specifications
5220198-5		1	Bearing boxes	Fendt Green
5212512-5	1	1	• Bearing box LH	Fendt Green
5212522-5	2	1	• Bearing box RH	Fendt Green

© 2025 Jost