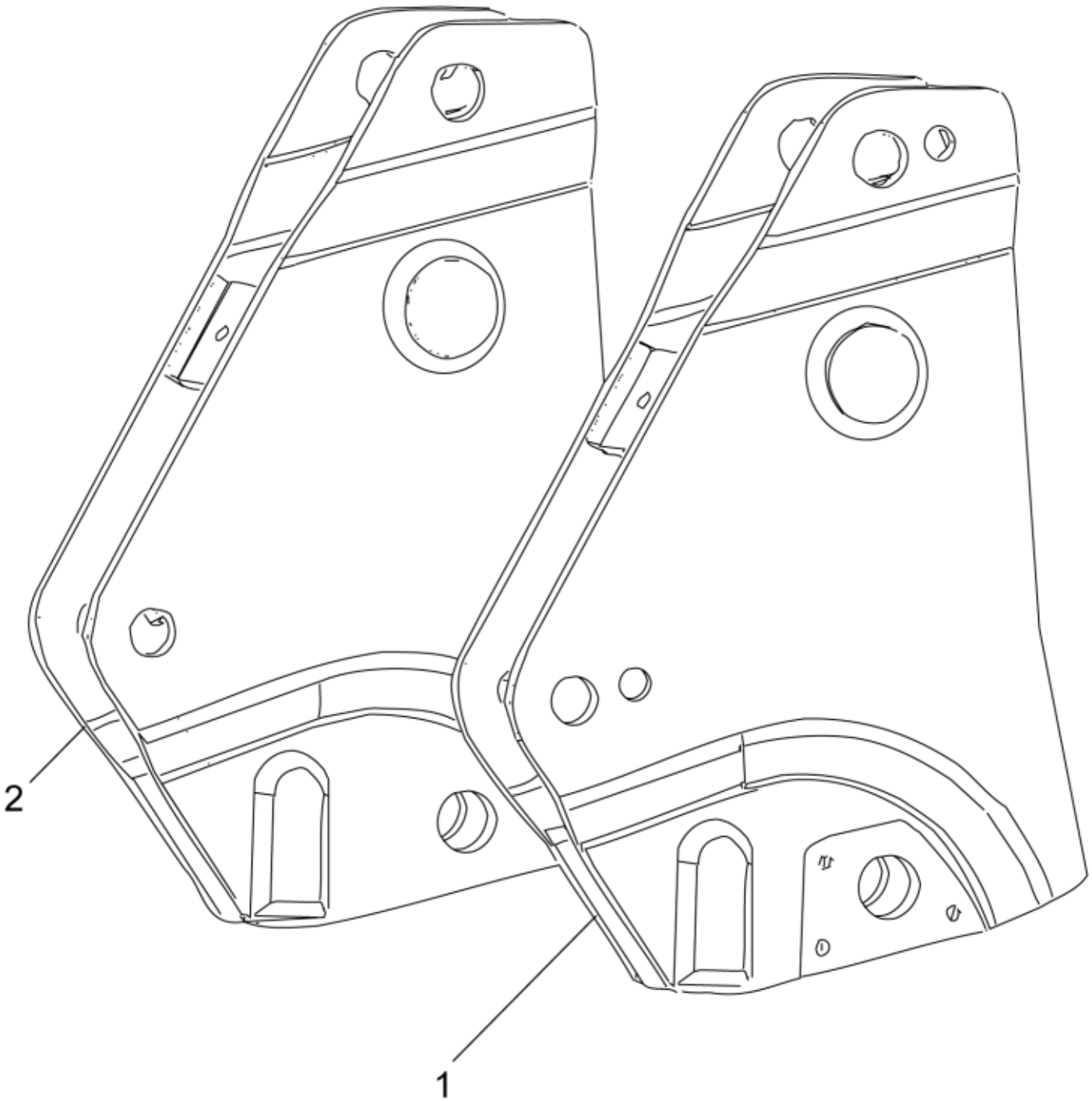

r5212514_5212524

© 2025 Jost

Part assemblies Bearing box

PartNo	Pos	Qty	Name	Specifications
5220207-6		1	Bearing box	
5212515-6	1	1 PCS	• Bearing box LH	McCormick Red
5212525-6	2	1	• Bearing box RH	McCormick Red

© 2025 Jost