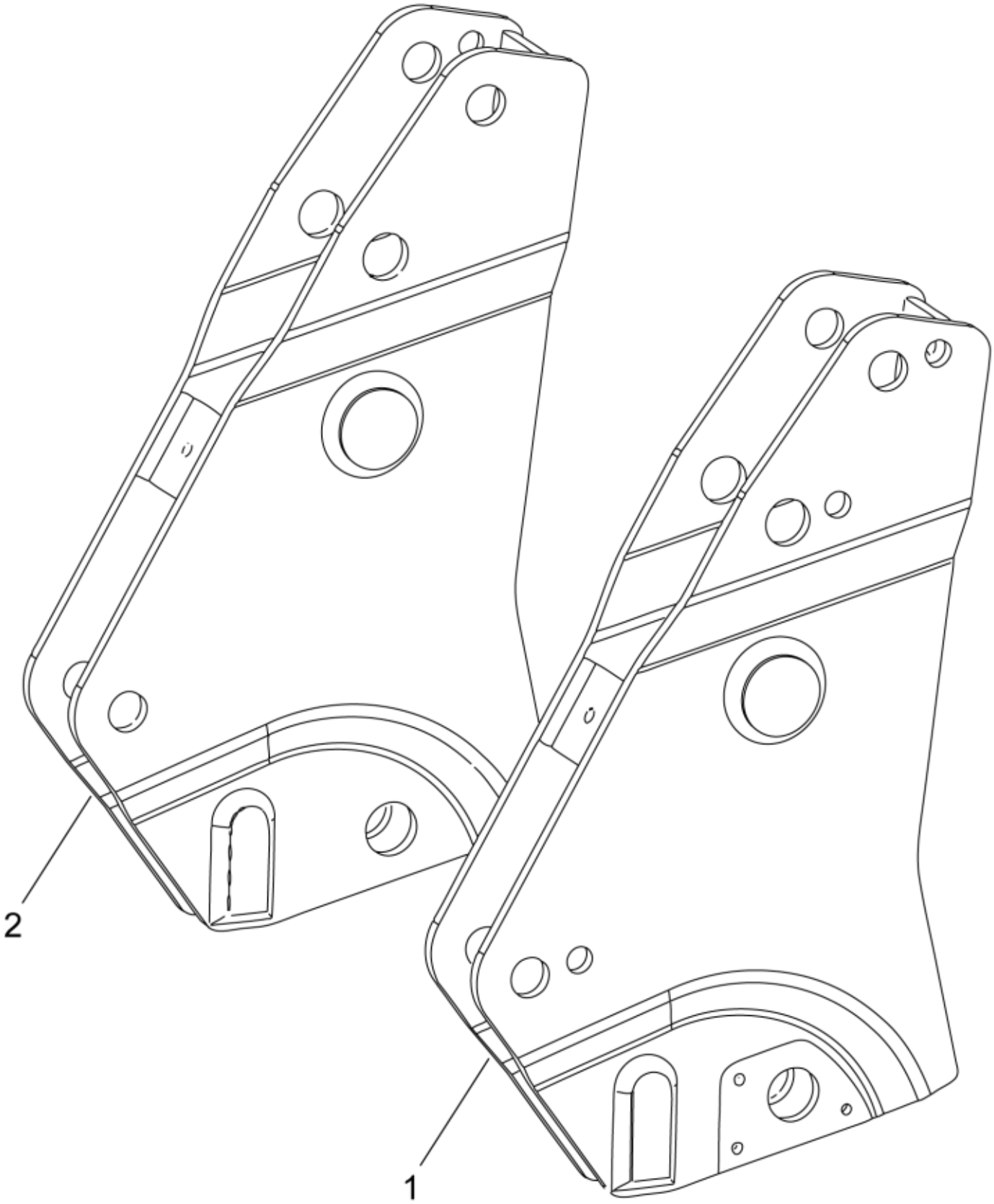

r5212513_5212523

© 2025 Jost

Part assemblies Bearing box

PartNo	Pos	Qty	Name	Specifications
5220198-6		1	Bearing box	
5212512-6	1	1	• Bearing box LH	McCormick Red
5212522-6	2	1	• Bearing box RH	McCormick Red

© 2025 Jost