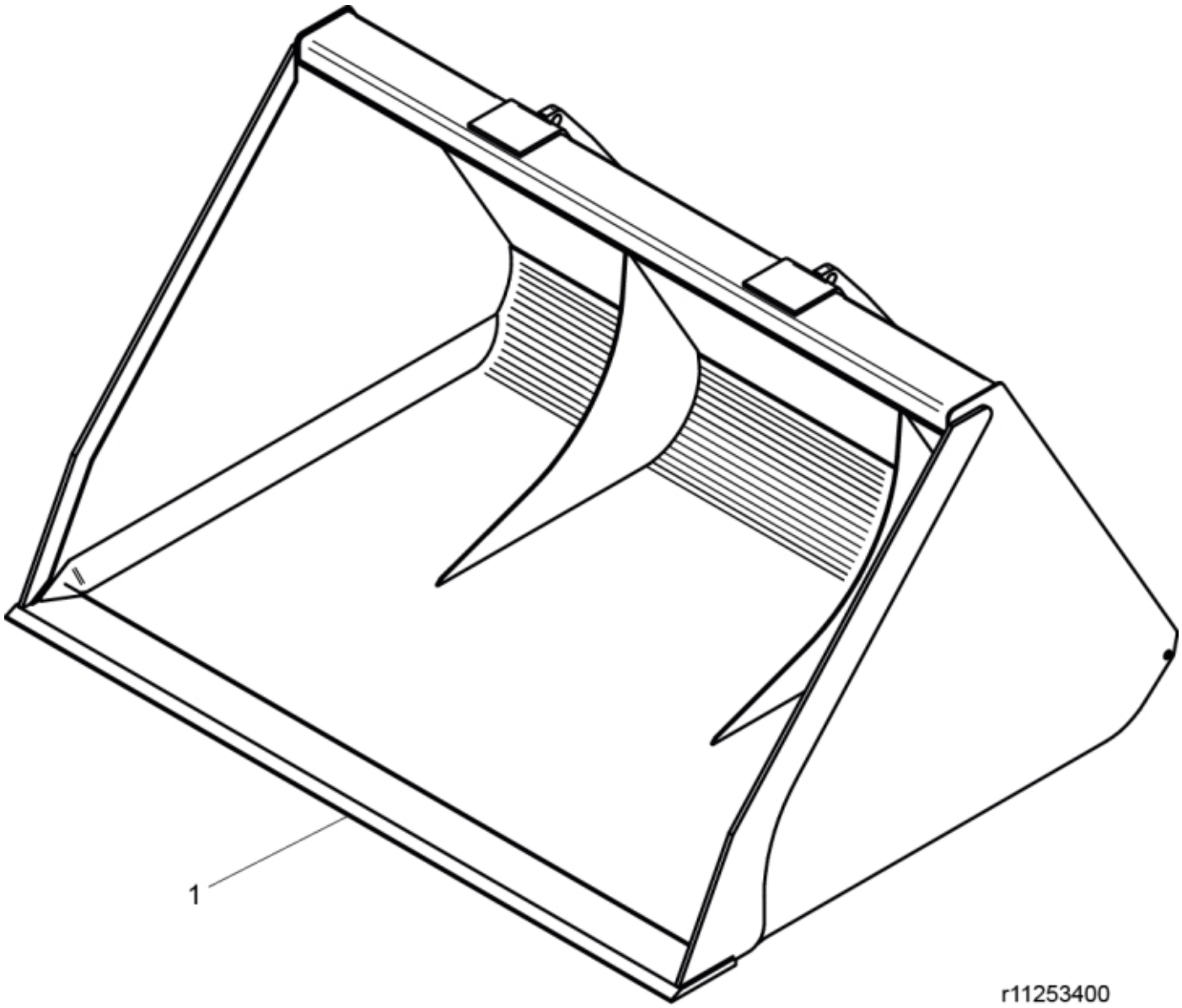

© 2025 Jost

Part assemblies	XV Bucket 29,24 CNH LM
Specification	Year From: 1/1/2015 12:00:00 AM
	Year To: 7/31/2018 12:00:00 AM

PartNo	Pos	Qty	Name	Specifications
60050058	1	1 PCS	Cutting edge	
60001650	2	2 PCS	Decal	Original Implements 361,7x100

© 2025 Jost