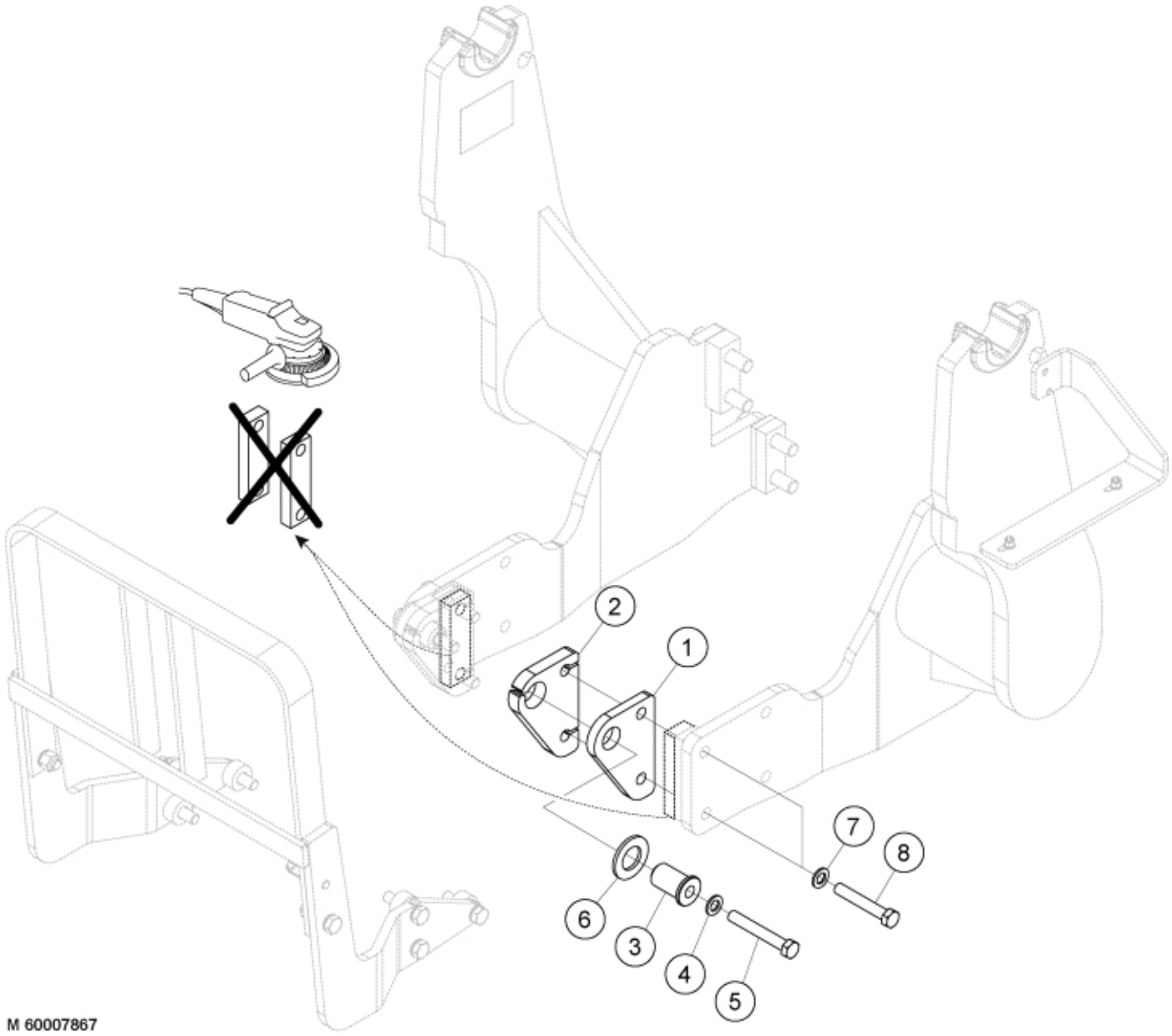

© 2025 Jost

Part assemblies Additional kit

PartNo	Pos	Qty	Name	Specifications
60007867			Additional kit	
60008245	1	2 PCS	Plate	
60007869	2	2 PCS	Spacer	
339308	3	2 PCS	Pin	
5013105	4	2	Washer	BRB 17 x 30 x 3 300HV
5002911	5	2 PCS	Screw	M6S M16 x 100 (10.9)
5050327	6	2 PCS	Washer	M36
20720202	7	4 PCS	Washer	Nord-lock 16, 720202
5002910	8	4	Screw	M6S_ M16 x 90 (10.9)

© 2025 Jost