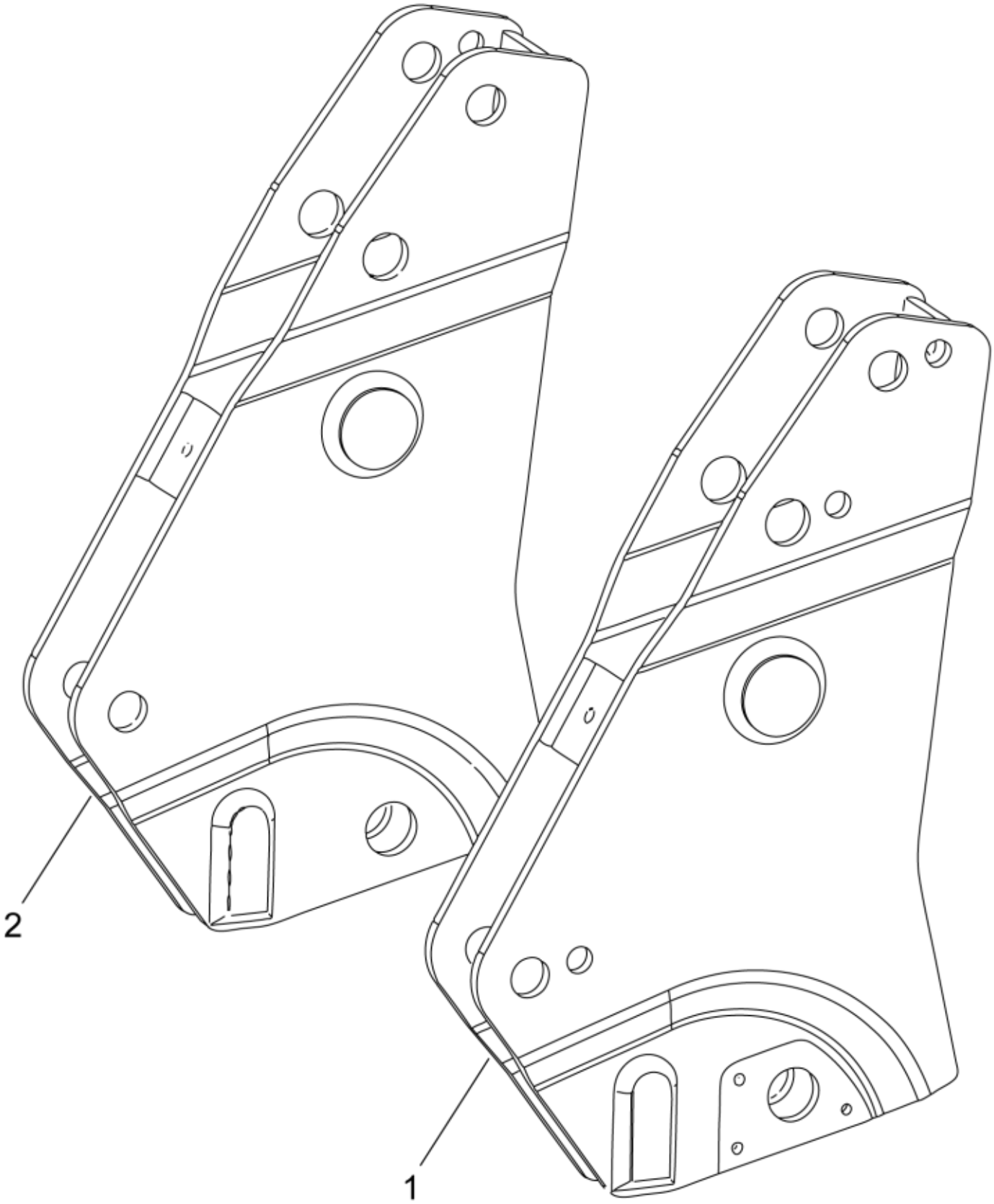

r5212513_5212523

© 2025 Jost

Part assemblies Bearing box

PartNo	Pos	Qty	Name	Specifications
5220198-25		1	Bearing box	
5212512-25	1	1	• Bearing box LH	Zetor Red
5212522-25	2	1	• Bearing box RH	Zetor Red

© 2025 Jost