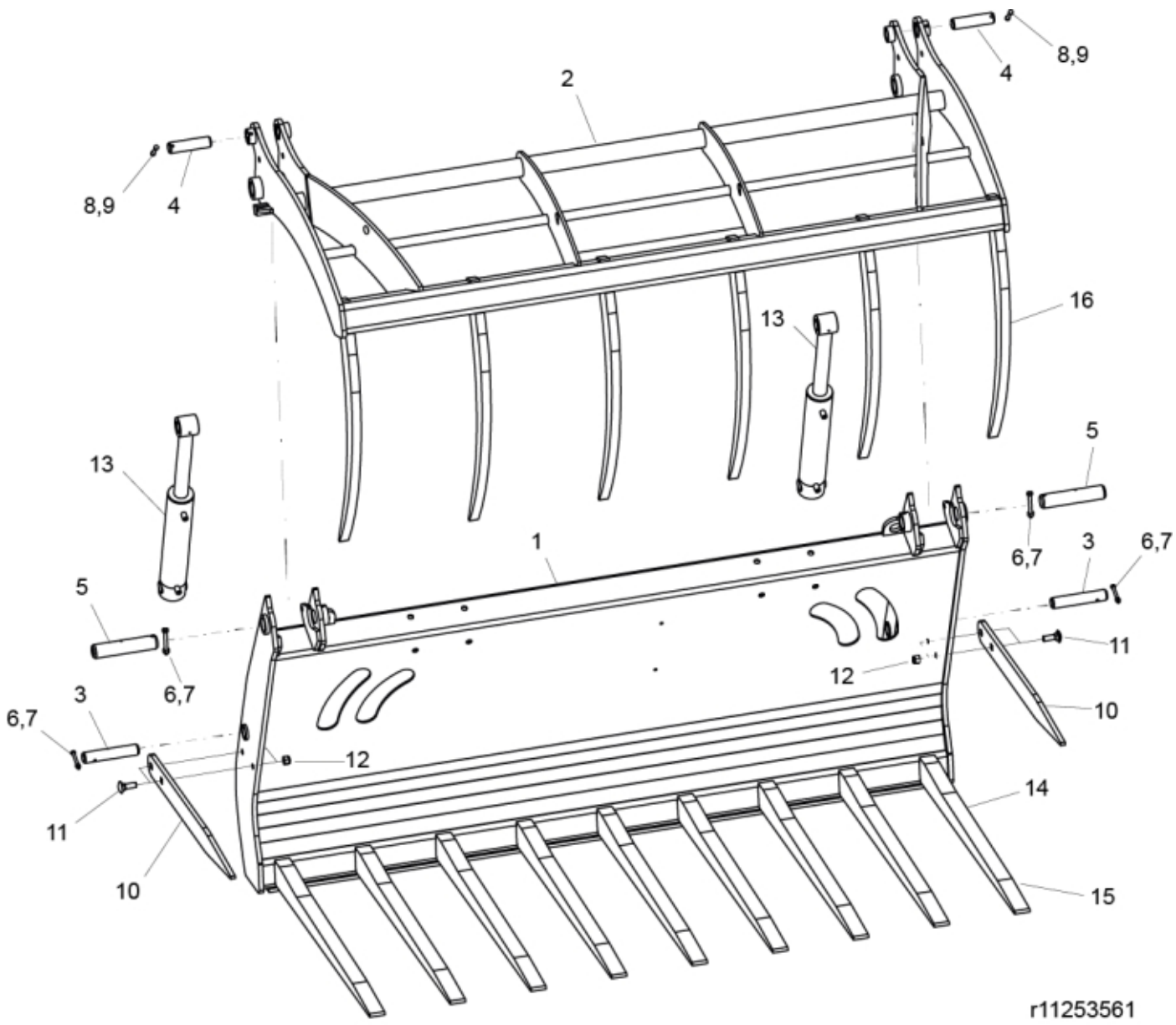
8,9
4
2
8,9
4
16
13
13
5
1
6,7
3
6,7
5
6,7
11
3
12
10
6,7
12
11
14
10
15
r11253561

© 2025 Jost

Part assemblies	Silograb HXL 17,24
Specification	Year From: 1/1/2015 12:00:00 AM
	Year To: 12/31/2017 12:00:00 AM

PartNo	Pos	Qty	Name	Specifications
60050218	1	1 PCS	Fork	
60050217	2	1 PCS	Grab head	
60050071	3	2 PCS	Pin	
60050089	4	2 PCS	Pin	Ø25.4 L=116
60050090	5	2 PCS	Pin	44,45x212
5002092	6	4	Screw	M6S M10x80 (8.8)
5011554	7	4	Nut	Loc-King M10
5050303	8	2	Screw	M6x50
5011552	9	2	Locking nut	M6 Locking
60050091	10	2 PCS	Side tine	
5050305	11	4	Screw	M16x50CB
5011557	12	4	Nut	Loc-King M16
60050079	13	2 PCS	Cylinder	
60050081		1	• Seal kit	cyl. 60050079
60050198	14	11 PCS	Tine	C type 40 mm
60050179	15	11 PCS	Tip	Tip 40 mm
60010579	16	7 PCS	Tine	
60004297	17	1 PCS	Decal, Brand	Silograb HXL

© 2025 Jost