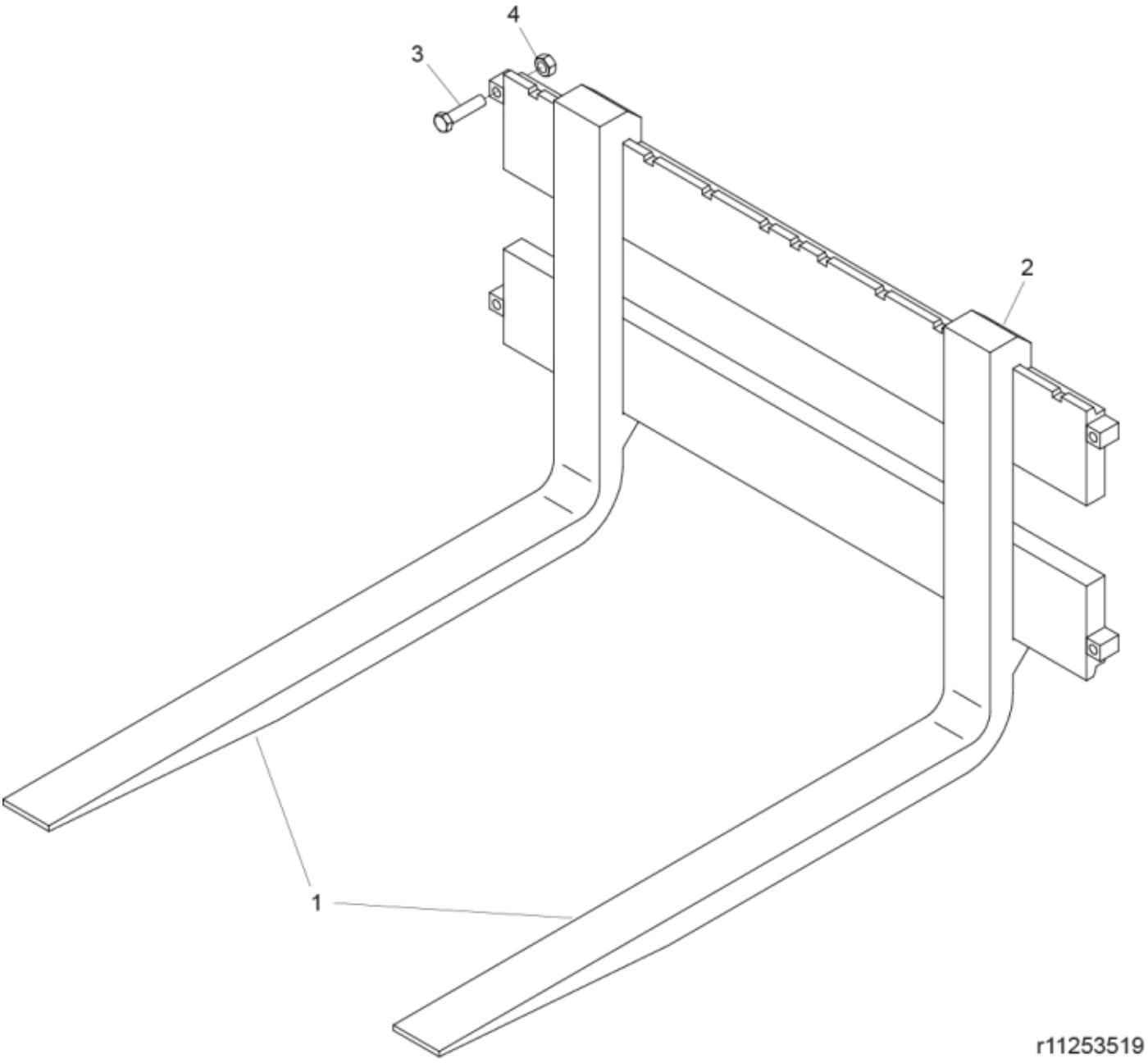

© 2025 Jost

Part assemblies	Pallet Fork P1.6 Dieci
Specification	Year From: 8/1/2016 12:00:00 AM
	Year To: 12/31/2017 12:00:00 AM

PartNo	Pos	Qty	Name	Specifications
11253820		1	Pallet Fork P1.6 Dieci	8/1/2016 12:00:00 AM, 12/31/2017 12:00:00 AM
60050158	1	2 PCS	Fork	Class 2B ITA 80x40
60050165	2	2	• Locking mechanism	ITA 2
5002157	3	4 PCS	Screw	M6S M16 x 70 (8.8)
5011557	4	4	Nut	Loc-King M16
60001649		1 PCS	Decal, Brand	Original Implements 307x85

© 2025 Jost