r11253464 MultibenneXL S/N 40900-

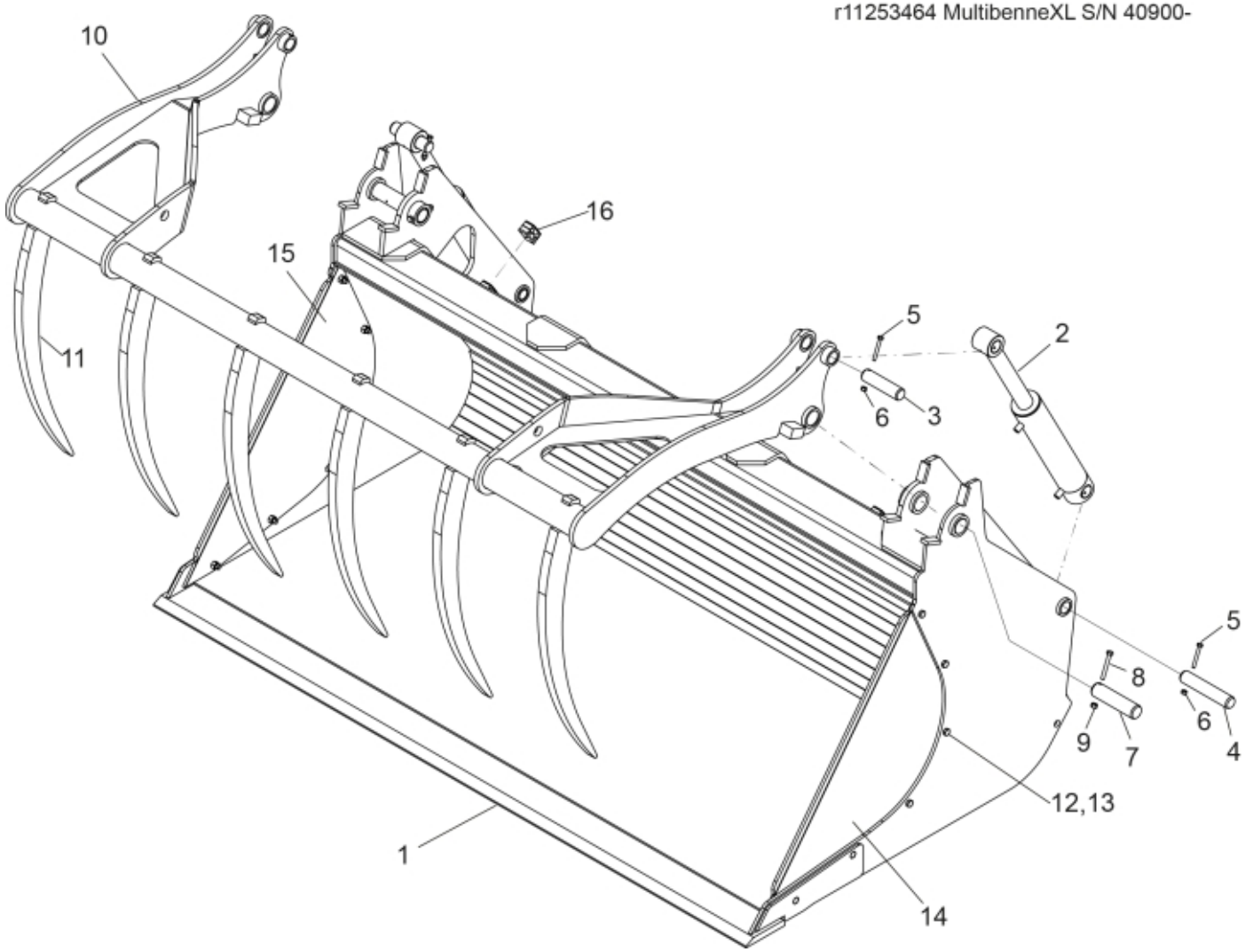



© 2025 Jost

| | |
|---|---|
| **Part assemblies** | Multibenne XL 23,24 Qfit S/N 40900- |
| **Specification** | Year From: 1/1/2015 12:00:00 AM |
| | Serial number from: 40900 |
| | Year To: 5/31/2016 12:00:00 AM |

| PartNo | Pos | Qty | Name | Specifications |
|---|---|---|---|---|
| 60050059 | 1 | 1 PCS | Cutting edge | |
| 60050105 | 2 | 2 PCS | Cylinder | |
| 60050108 | | 1 | • Seal kit | |
| 60050102 | 3 | 2 PCS | Pin | Ø35-en8 x138 |
| 60050101 | 4 | 2 PCS | Pin | Ø35-en8 x184 |
| 5004056 | 5 | 4 | Screw | M8x65 |
| 5011553 | 6 | 4 | Nut | M6M M8 Loc-king |
| 60050090 | 7 | 2 PCS | Pin | 44,45x212 |
| 5002092 | 8 | 2 | Screw | M6S M10x80 (8.8) |
| 5011554 | 9 | 2 | Nut | Loc-King M10 |
| 60010586 | 10 | 1 PCS | Grab head | |
| 60010592 | 11 | 6 PCS | Tine | |
| 5002703 | 12 | 6 PCS | Screw | M6S_ M12 x 1,25 x 40 (8.8) |
| 5011555 | 13 | 6 | Nut | M12 Loc |
| 60010593 | 14 | 1 PCS | Plate | LH |
| 60010594 | 15 | 1 PCS | Plate | RH |
| 60050092 | 16 | 4 PCS | Hose clamp cpl. | |
| 60004291 | 17 | 1 PCS | Decal | Multibenne XL |


© 2025 Jost