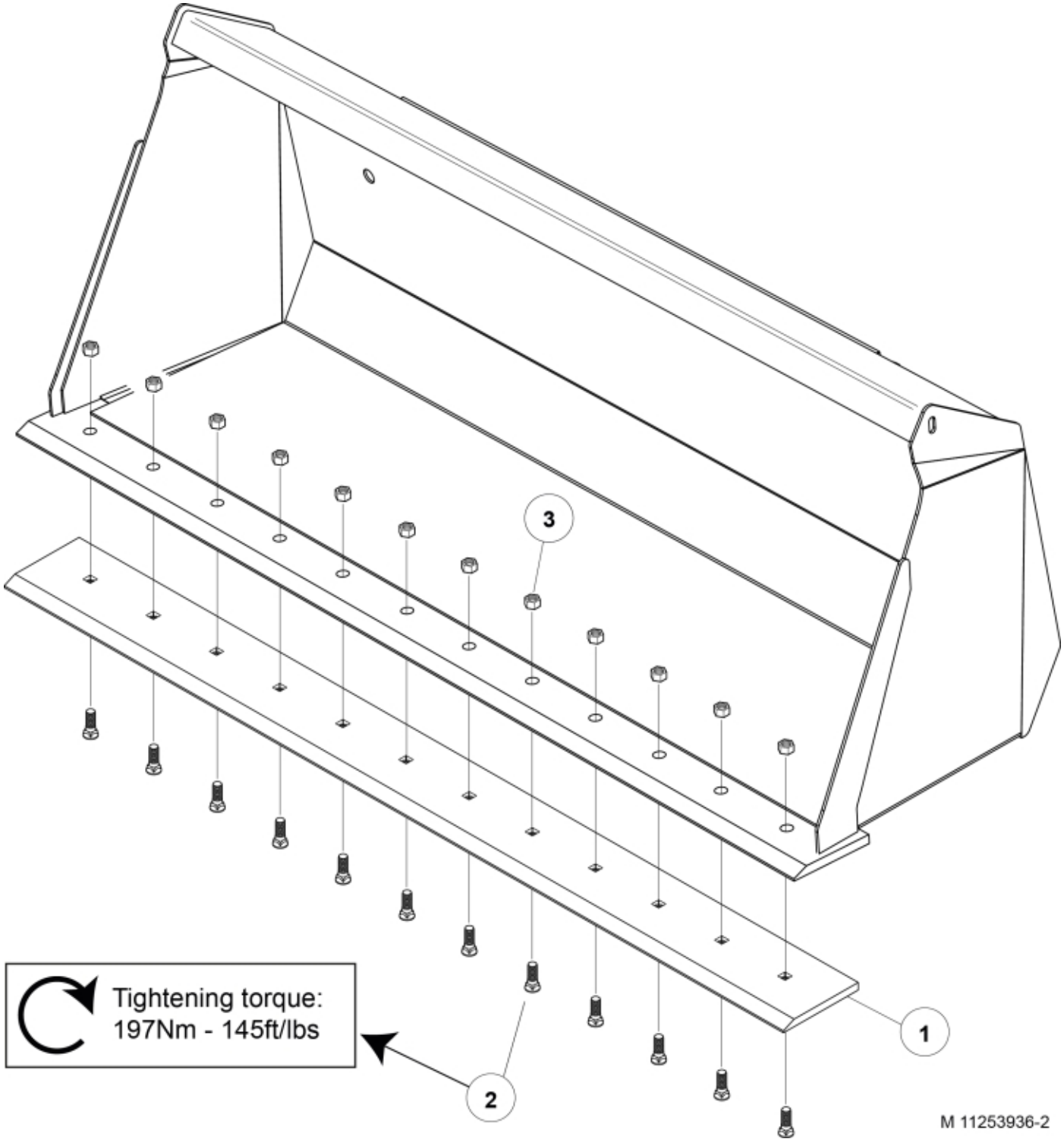

© 2025 Jost

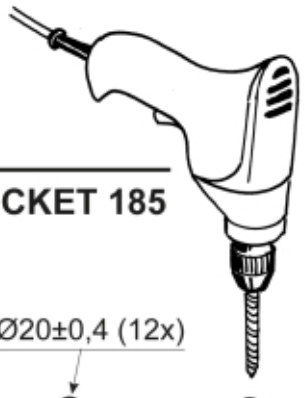

DRILLING DIMENSIONS

M 11253936-1

© 2025 Jost

Description	180
Part assemblies	Bolt on Cutting Edge kit 185

PartNo	Pos	Qty	Name	Specifications
11253936		1	Bolt on Cutting Edge kit 185	
60008565-22	1	1 PCS	Cutting edge	Bolt-on
5050364	2	12 PCS	Plow bolt	5/8" - 2 inch
5050485	3	12	Locking nut	UNC 5/8"

© 2025 Jost