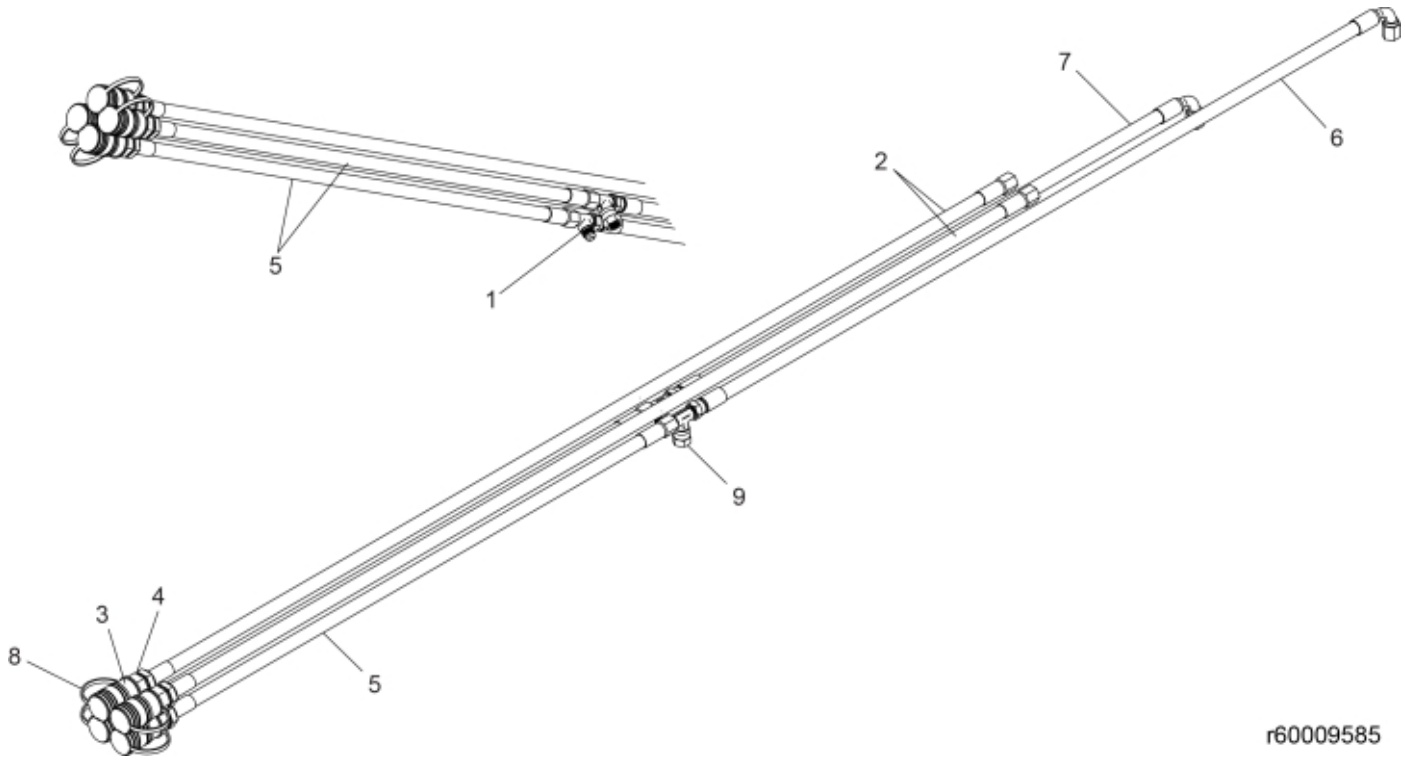

© 2025 Jost

Description	MF
Part assemblies	Main hose kit

PartNo	Pos	Qty	Name	Specifications
5028077	1	1	Adaptor	
60009586	2	2 PCS	Hose	3/8" L=2550mm
5045010	3	4	Quick Coupling	ISO-A 3/8" F - G1/2
5013853	4	4	Dowty washer	Tredo 1/2", Part is included in kit 60007907 Hose cpl., 9032177 Hose cpl.
60009606	5	2 PCS	Hose	3/8" L=850mm
9031832	6	1 PCS	Hose	3/8" L=3250mm
9031829	7	1 PCS	Hose	3/8" L=2820mm
5034111	8	4	Dust Cover	ISO 3/8"
5028105	9	1	Adaptor	

© 2025 Jost