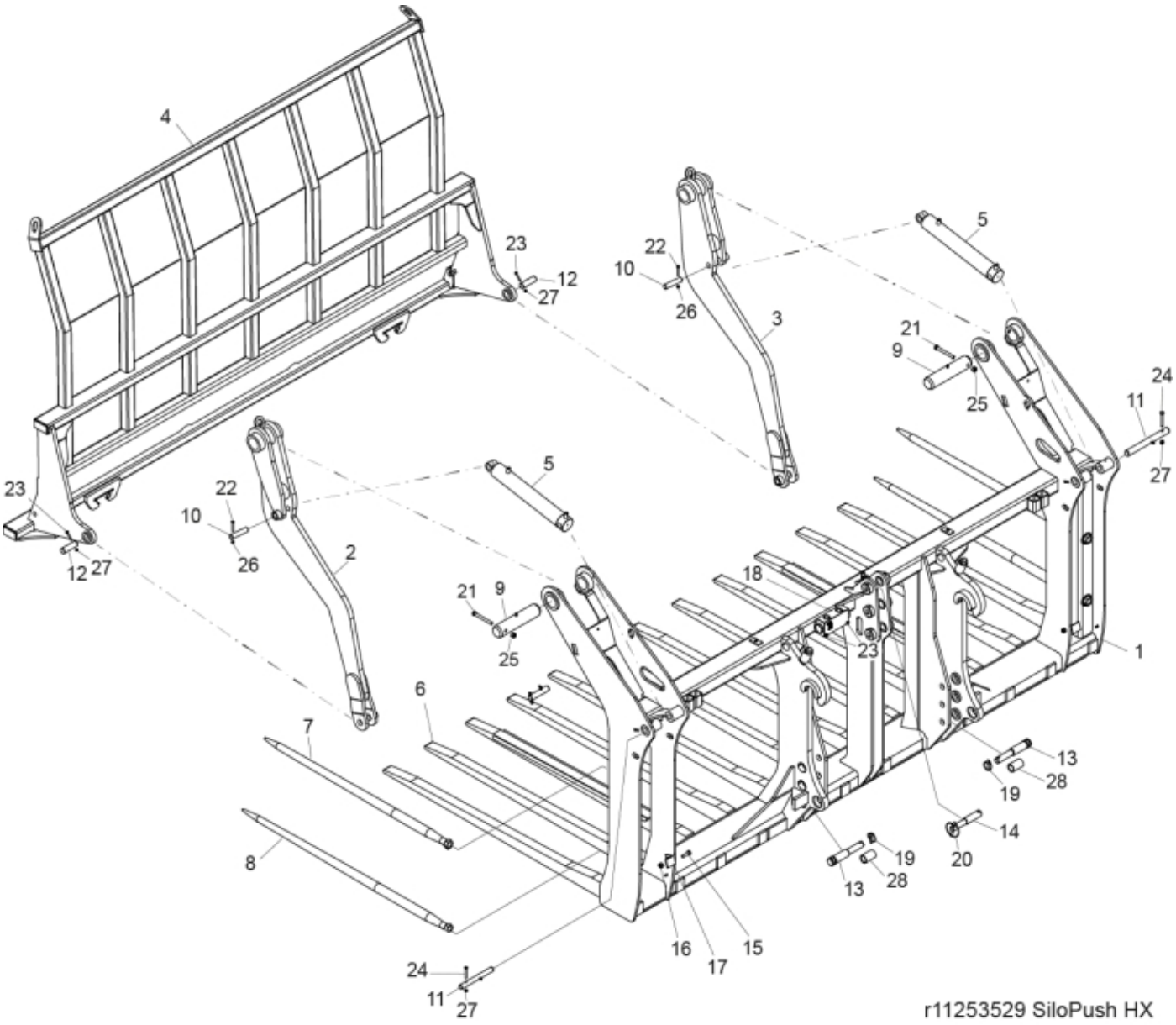

r11253529 SiloPush HX

© 2025 Jost

Part assemblies	SiloPush 275HX BM Large
Specification	Year From: 1/1/2015 12:00:00 AM
	Year To: 5/31/2016 12:00:00 AM

PartNo	Pos	Qty	Name	Specifications
60010599	1	1 PCS	Frame	275HX
60050188	2	1 PCS	Arm	LH
60050189	3	1 PCS	Arm	RH
60050194	4	1 PCS	Gate	275HX
60050172	5	2 PCS	Cylinder	
60050082		1	• Seal kit	
60050122	6	11 PCS	Tine	
5068120-17	7	2	Tine with nut	L=1240mm (5068004)
60050127	8	2 PCS	Tine with nut	Conus 2 x L=1400
60050173	9	2 PCS	Pin	Ø60 L=265
60050089	10	2 PCS	Pin	Ø25.4 L=116
60050175	11	2 PCS	Pin	Ø25 L=240
60050174	12	2 PCS	Pin	Ø30 L=100 Greased
60050190	13	2 PCS	Pin	Dual category
60050191	14	1 PCS	Pin	Dual category
5050322	15	2	Screw	M10x35
5011554	16	2	Nut	Loc-King M10
60050181	17	2 PCS	Bracket	
60050180	18	1 PCS	Valve assy.	3/4" BSP Flow Divider Valve
5050320	19	2 PCS	Linch pin	
5050319	20	1 PCS	Linch pin	
5050321	21	2	Screw	M12 x 110
5050303	22	2	Screw	M6x50
5050323	23	4	Screw	M8x60
5004056	24	2	Screw	M8x65
5011555	25	2	Nut	M12 Loc
5011552	26	2	Locking nut	M6 Locking
5011553	27	4	Nut	M6M M8 Loc-king
60050192	28	2 PCS	Sleeve	
60004295	29	1 PCS	Decal, Brand	SiloPush

© 2025 Jost