r11253745 MultibenneXL

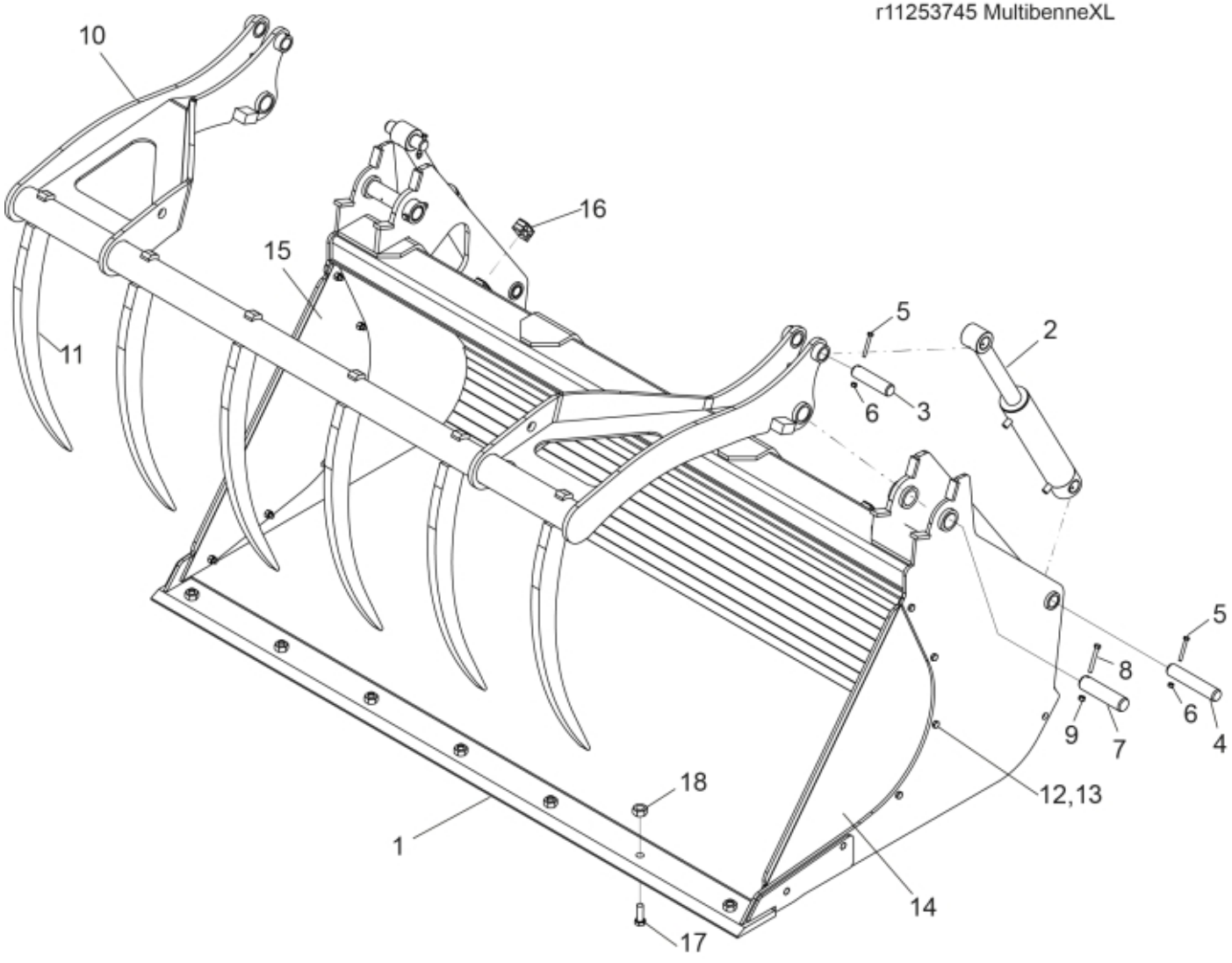

© 2025 Jost

Description	Bolt-on cutting edge
Part assemblies	Multibenne XL 23,24 Manitou S/N 40900-
Specification	Year From: 1/1/2015 12:00:00 AM
	Serial number from: 40900
	Year To: 5/31/2016 12:00:00 AM

PartNo	Pos	Qty	Name	Specifications
60050064	1	1 PCS	Cutting edge	Bolt-on
60050105	2	2 PCS	Cylinder	
60050108		1	• Seal kit	
60050102	3	2 PCS	Pin	Ø35-en8 x138
60050101	4	2 PCS	Pin	Ø35-en8 x184
5004056	5	4	Screw	M8x65
5011553	6	4	Nut	M6M M8 Loc-king
60050090	7	2 PCS	Pin	44,45x212
5002092	8	2	Screw	M6S M10x80 (8.8)
5011554	9	2	Nut	Loc-King M10
60010586	10	1 PCS	Grab head	
60010592	11	6 PCS	Tine	
5002703	12	6 PCS	Screw	M6S_ M12 x 1,25 x 40 (8.8)
5011555	13	6	Nut	M12 Loc
60010593	14	1 PCS	Plate	LH
60010594	15	1 PCS	Plate	RH
60050092	16	4 PCS	Hose clamp cpl.	
5050650	17	8 PCS	Plow bolt	3/4" - 2.5 inch
5050652	18	8	Locking nut	UNC 3/4"
60004291	19	1 PCS	Decal	Multibenne XL

© 2025 Jost