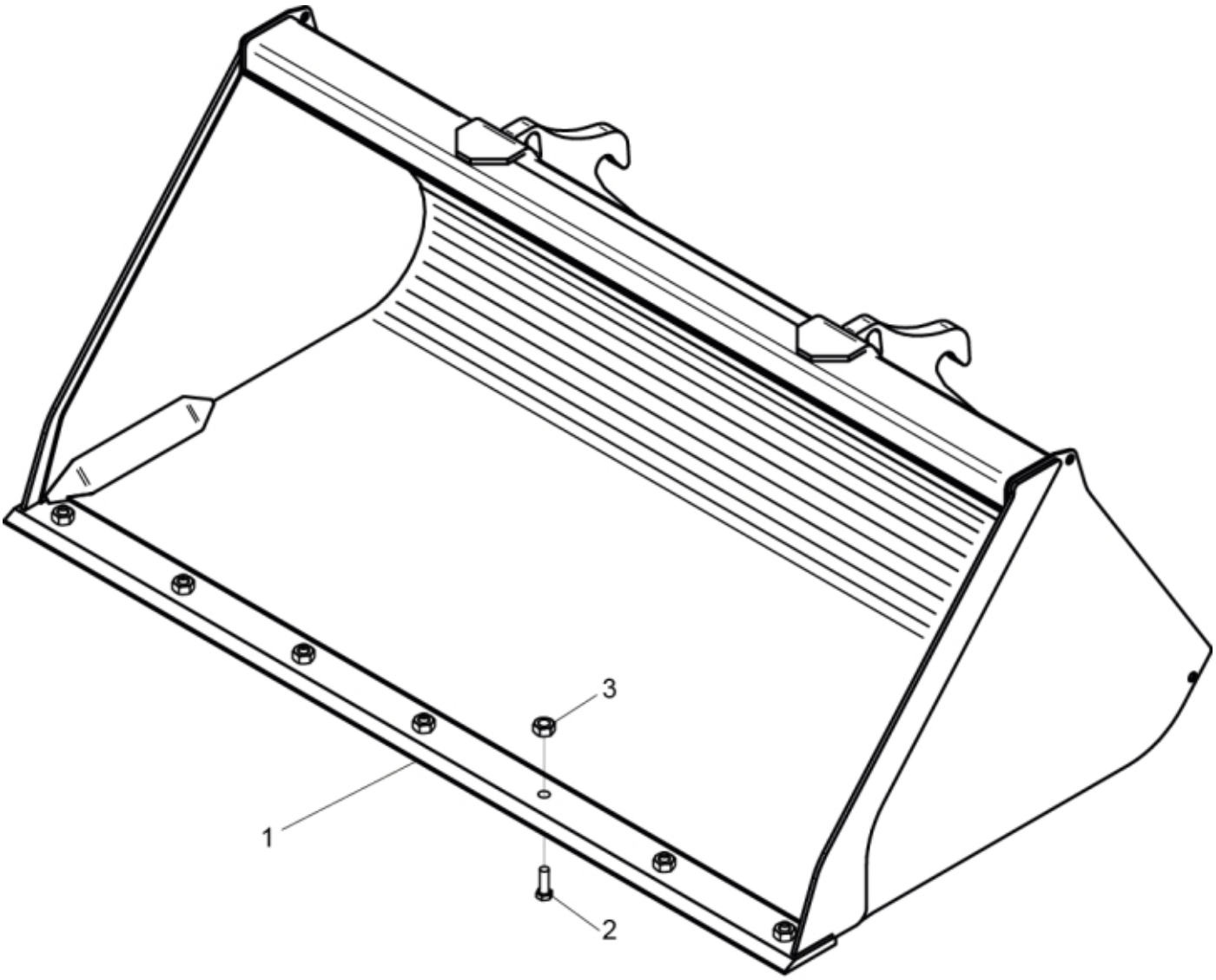

© 2025 Jost

Description	Bolt-on cutting edge
Part assemblies	HDX Bucket 11,20 Dieci
Specification	Year From: 8/1/2015 12:00:00 AM
	Year To: 12/31/2016 12:00:00 AM

PartNo	Pos	Qty	Name	Specifications
60050068	1	1 PCS	Cutting edge	Bolt-on
5050650	2	7 PCS	Plow bolt	3/4" - 2.5 inch
5050652	3	7	Locking nut	UNC 3/4"
60001650	4	2 PCS	Decal	Original Implements 361,7x100

© 2025 Jost