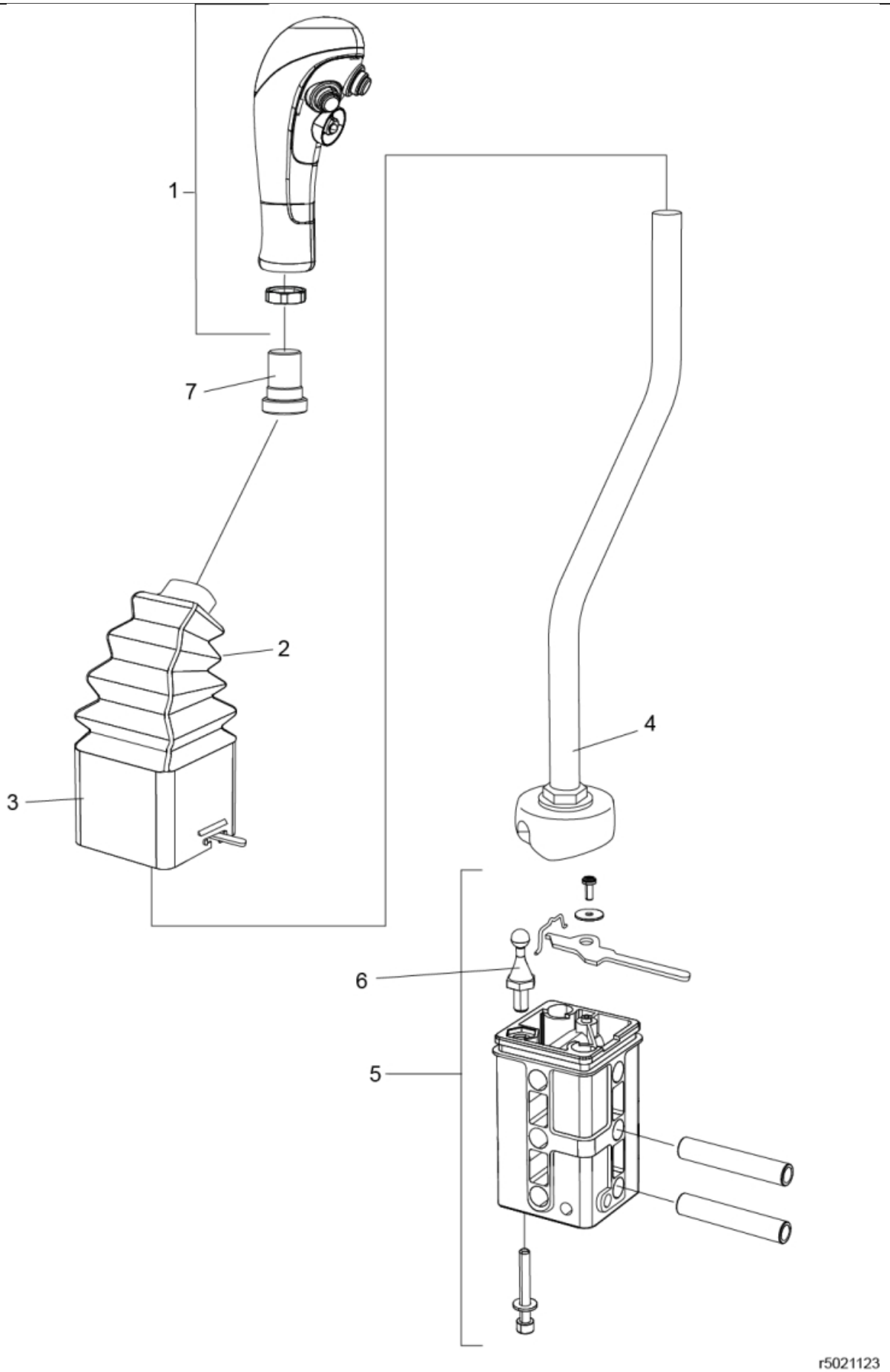

© 2025 Jost

Description	LCS
Part assemblies	Control lever RH

PartNo	Pos	Qty	Name	Specifications
5021047	1	1	• Handle 2+1 RH	
5020337	2	1	• Gaiter	
4500402	3	1	• Collar	
60012230	4	1	• Lever cpl.	rotation angle 180°
4500397	5	1	• Housing cpl.	
4500400	6	1	•• Pivot	
4500404	7	1	• Adaptor	M14/M18

© 2025 Jost