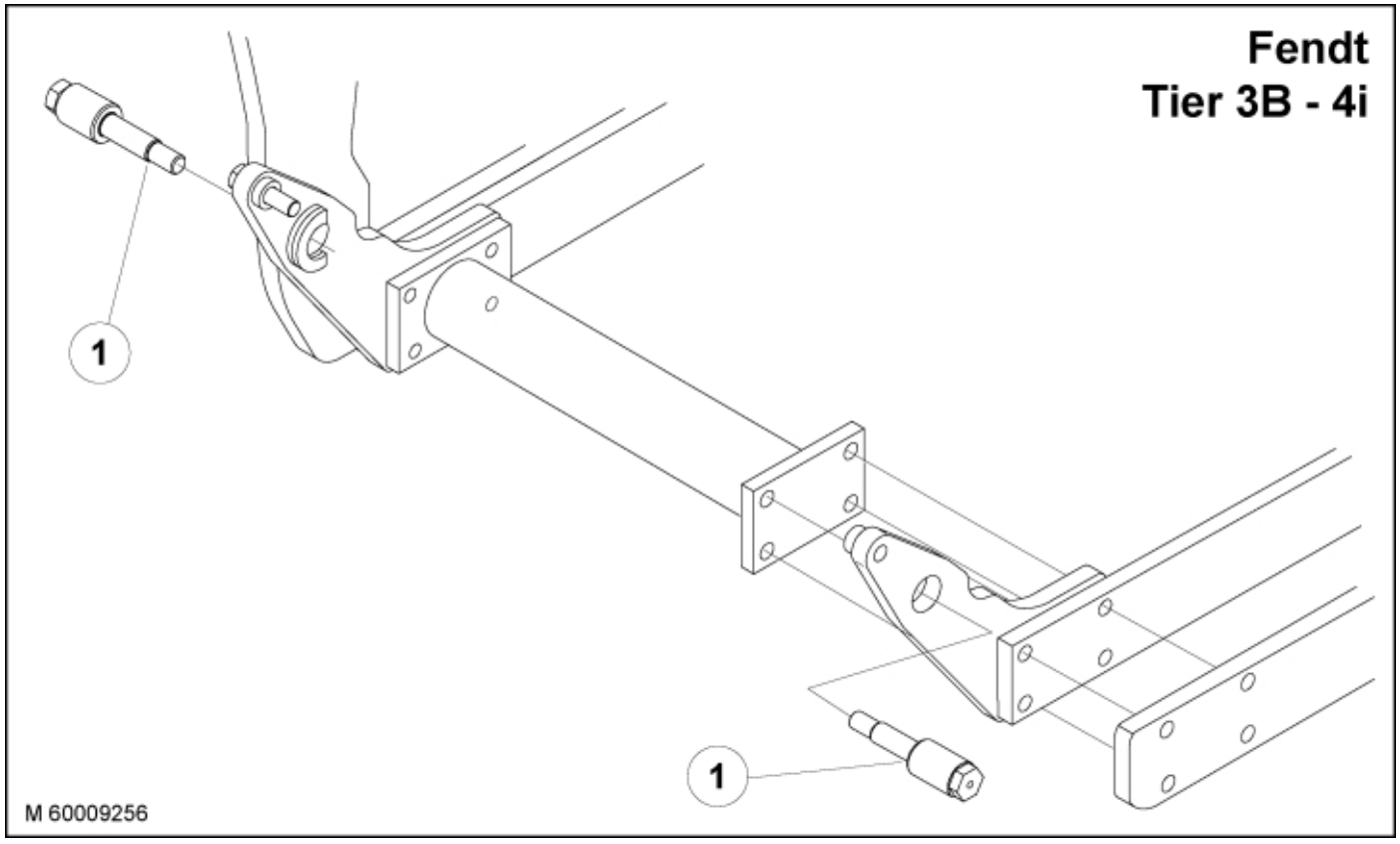

© 2025 Jost

Part assemblies	Pin kit

PartNo	Pos	Qty	Name	Specifications
60009256			Pin kit	
60002285	1	2 PCS	Pin	

© 2025 Jost