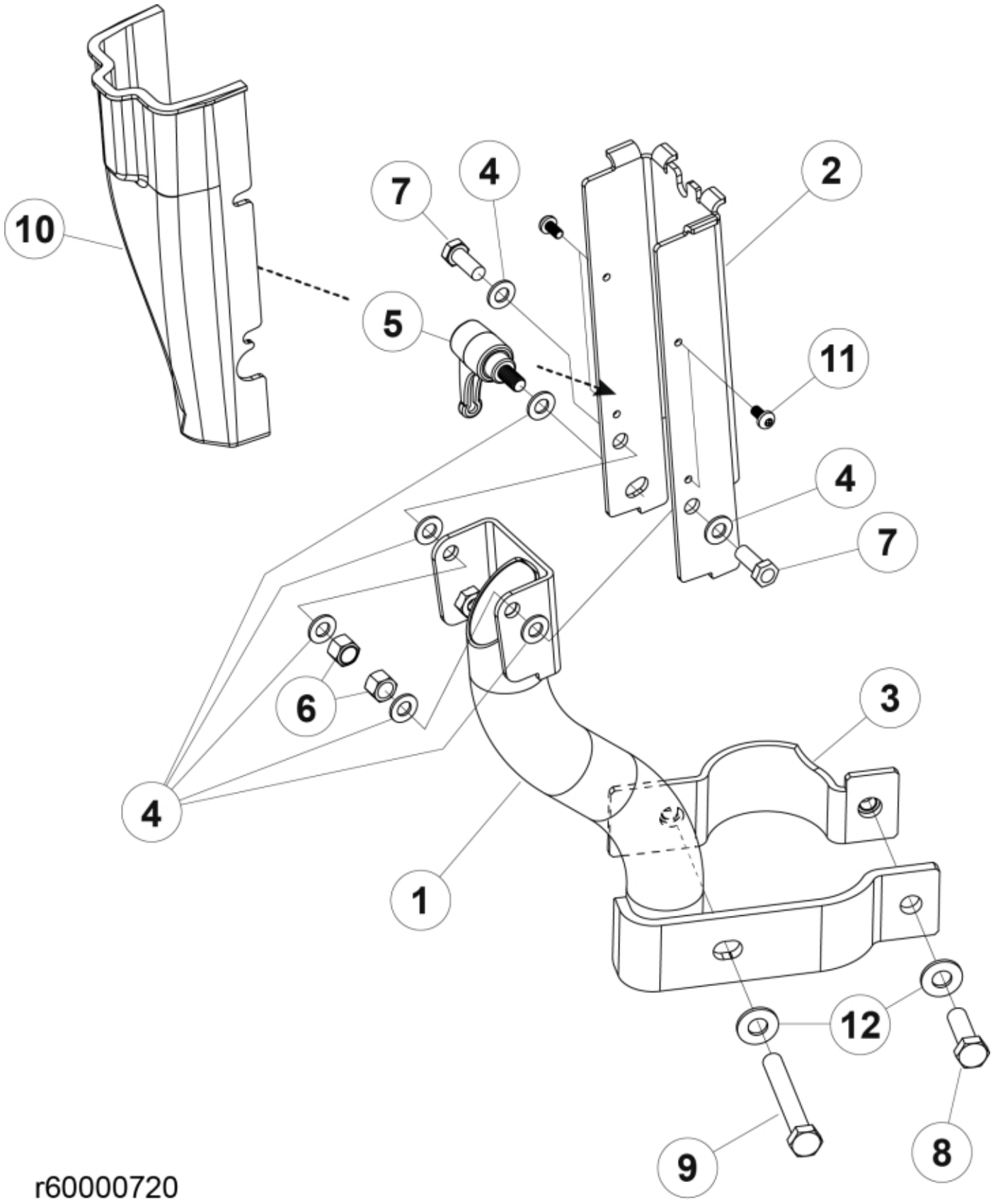

© 2025 Jost

Part assemblies Joystick bracket

PartNo	Pos	Qty	Name	Specifications
60015914		1 PCS	Joystick bracket	
60000706	1	1 PCS	• Bracket	
60000705	2	1 PCS	• Bracket	
60000977	3	1 PCS	• Bracket	
5013101	4	8	• Washer	BRB 8,4 x 16
5022132	5	1	• Handle	
5011553	6	2	• Nut	M6M M8 Loc-king
5002051	7	2	• Screw	M6S 8 x 20
5002077	8	1	• Screw	M6S 10x30
5002082	9	1	• Screw	M6S M10x70 (8.8)
10418346	10	1 PCS	• Cover	
60000984	11	4	• Screw	MRT Tx25 M5x10
5013110	12	2	• Washer	BRB 10.5x22x2

© 2025 Jost