

MX

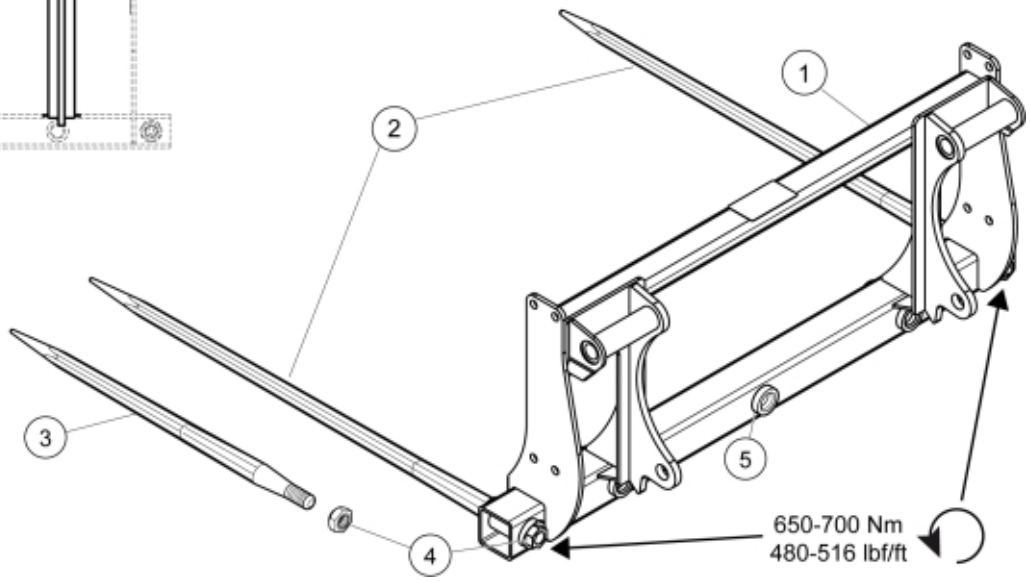



M 11251572, 11251582

© 2025 Jost

Description	Tine length 827 mm
Part assemblies	Bale Fork, MX
Specification	Year From: 1/1/2003 12:00:00 AM
	Year To: 5/1/2022 12:00:00 AM

PartNo	Pos	Qty	Name	Specifications
11251572			Bale Fork, MX	1/1/2003 12:00:00 AM, 5/1/2022 12:00:00 AM
60010567	1	1 PCS	Frame	MX
5068114-17	3	2	Tine with nut	L=827mm (replaces 5068003)
5068116	4	1	• Nut	Conus 2
1209699	5	2	Sleeve	
60049053	6	2	Decal	"Q" small 80x57

© 2025 Jost