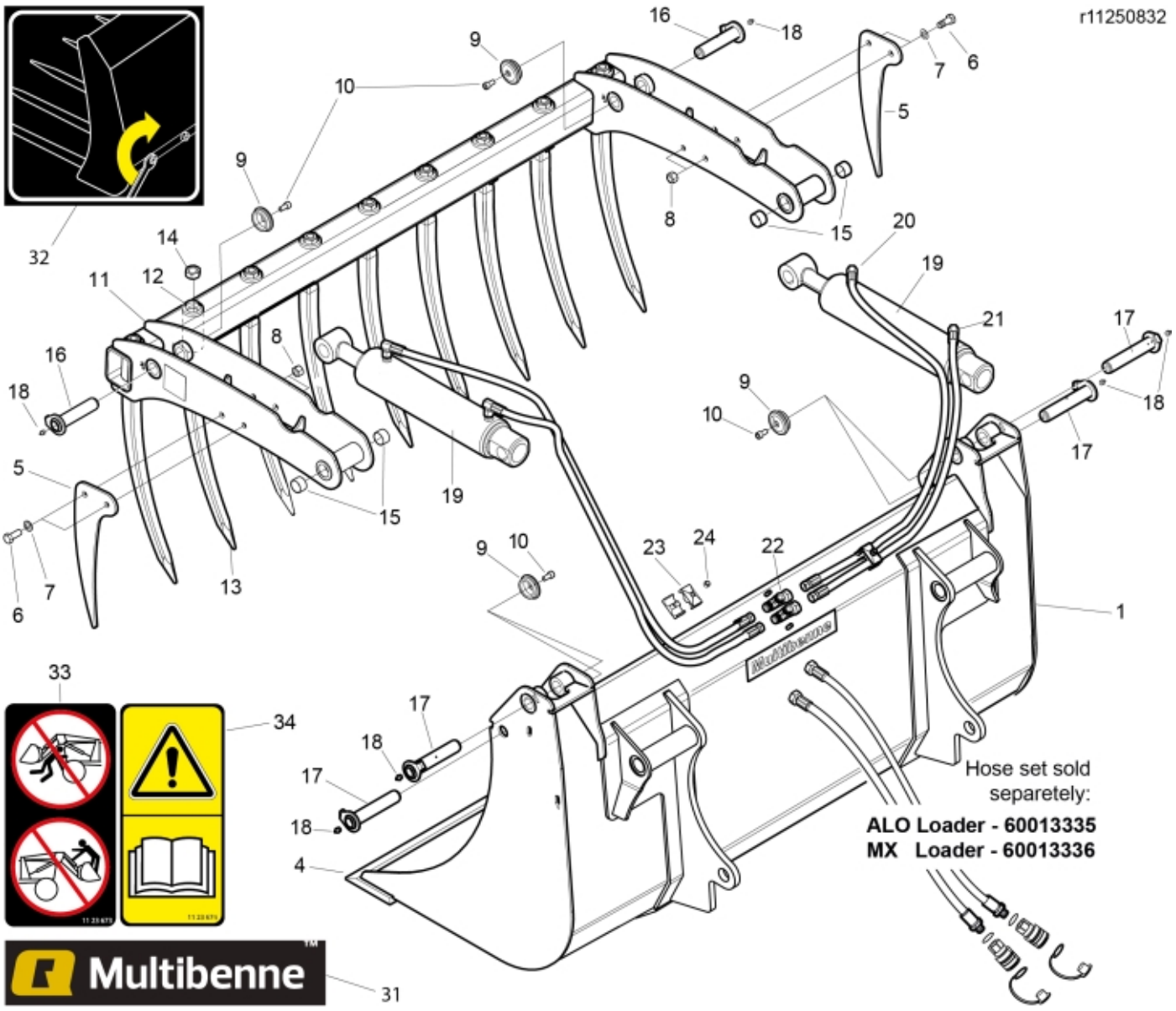
r11250832
Hose set sold separetely:
ALO Loader - 60013335
MX Loader - 60013336
Multibenne

© 2025 Jost

Part assemblies	Multibenne 170 MX
Specification	Year From: 4/1/2010 12:00:00 AM

PartNo	Pos	Qty	Name	Specifications
11250832			Multibenne 170 MX	4/1/2010 12:00:00 AM
60009812-17	1	1 PCS	Bucket	Multibenne 170 MX
11260717	4	1	• Cutting edge	
5022119		2	• Plug	
11260312-22	5	2	Side tine	
5002127	6	4	Screw	M6S M14 x 35
5013107	7	4	Washer	BRB 15 x 26 x 2
5011556	8	4	Nut	M14
5215131	9	6	Locking cover	
5002076	10	6	Screw	M6S M10 x 20 (8.8)
11261854-17	11	1 PCS	Upper part, without tines	
9010120	12	8 PCS	• Sleeve	Conus 1 Curved
5068112-17	13	8 PCS	Tine with nut	L=680, Curved
5068111	14	1	• Nut	Conus 1
5018515	15	4	Bushing	D30 L=20
9020048	16	2 PCS	Pin	D=30mm, L=125mm
9020047	17	4	Pin	D=30mm, L=151mm
5023005	18	6	Greaser	M 10 x 1
60110579-1	19	2	Cylinder	
1103117	20	2	Hose	3/8"
9031028	21	2 PCS	Hose	3/8"
10834151	22	1 PCS	T-Adapter	
5016968	23	2	Hose clamp	
5011553	24	4	Nut	M6M M8 Loc-king
11137134	31	1 PCS	Decal	Multibenne
11136517	32	1	Warning decal	"Tightening of tine"
1123673	33	1	Warning decal	
1123674	34	1	Warning decal	"Read manual"
60013335			Hose Kit Euro/SMS	Sold Separately
60013336			Hose kit MX	Sold Separately

© 2025 Jost