A Euro

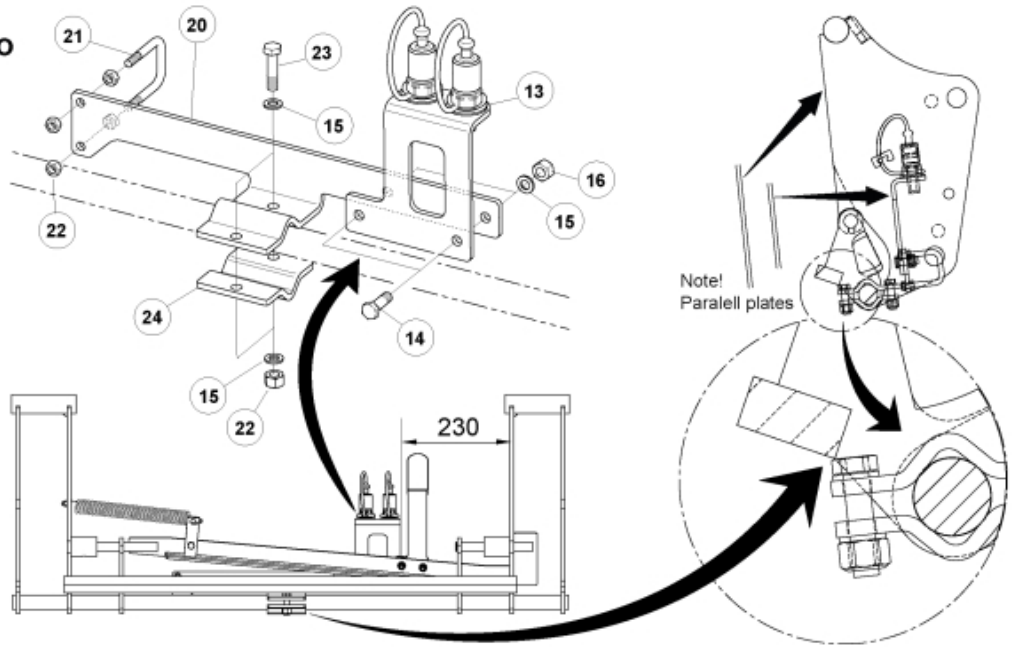

B1 Skid Steer Art no:60014453

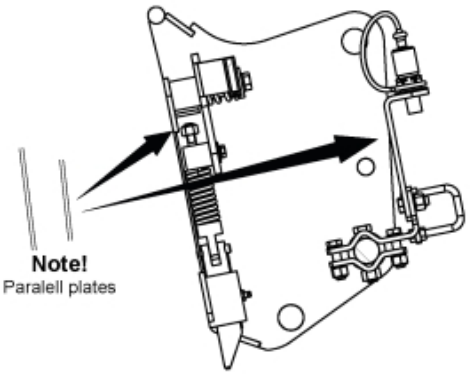

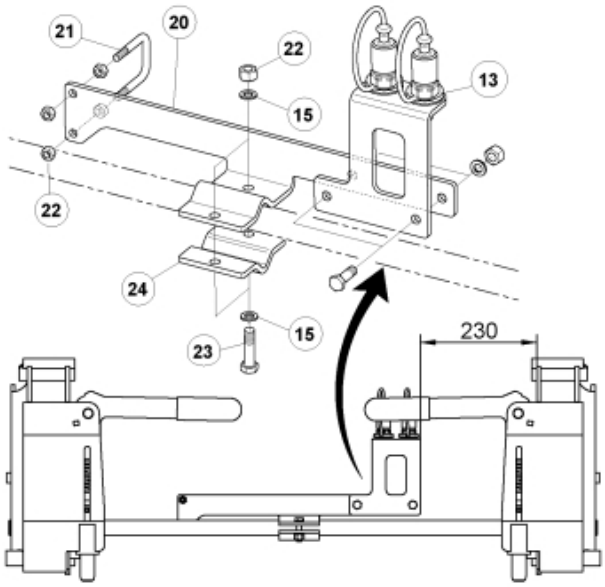

M 60010009-1

B2 Skid Steer Art no:60005497

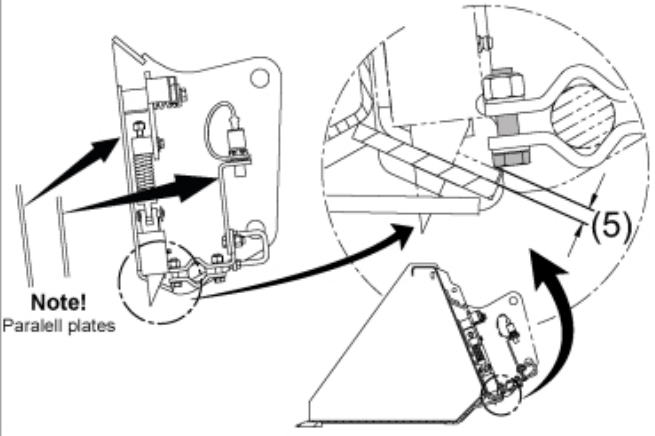

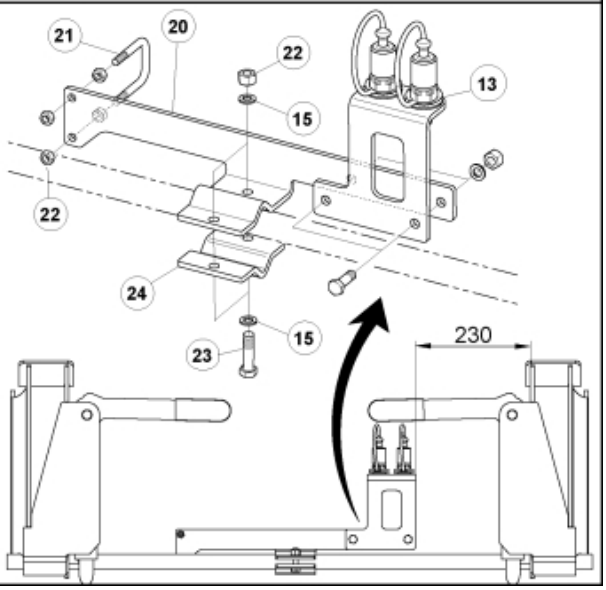

© 2025 Jost

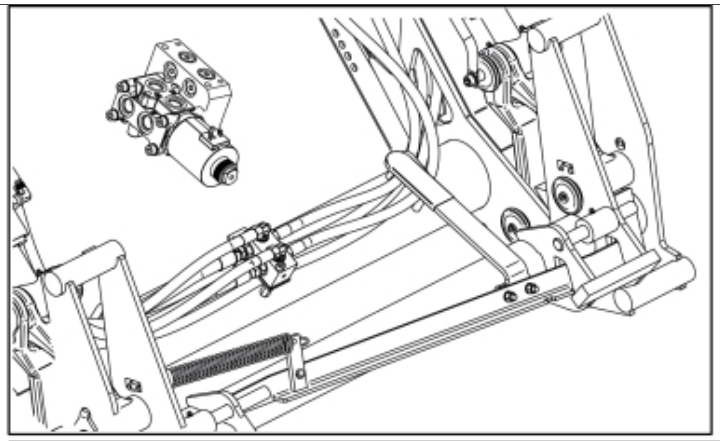

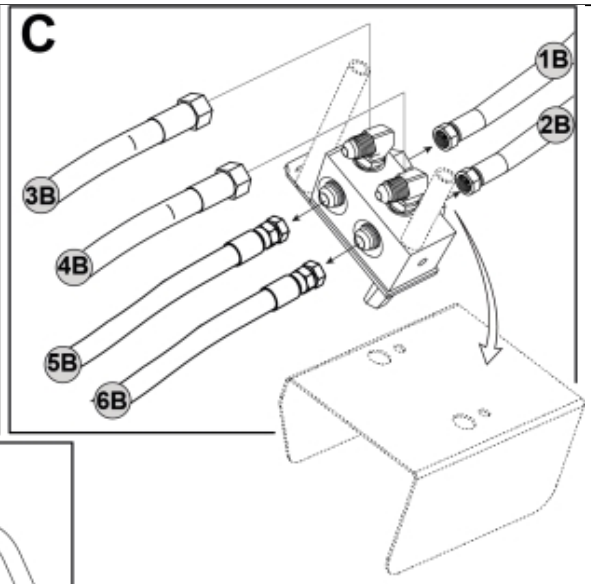
C
1B
2B
3B
4B
5B
6B

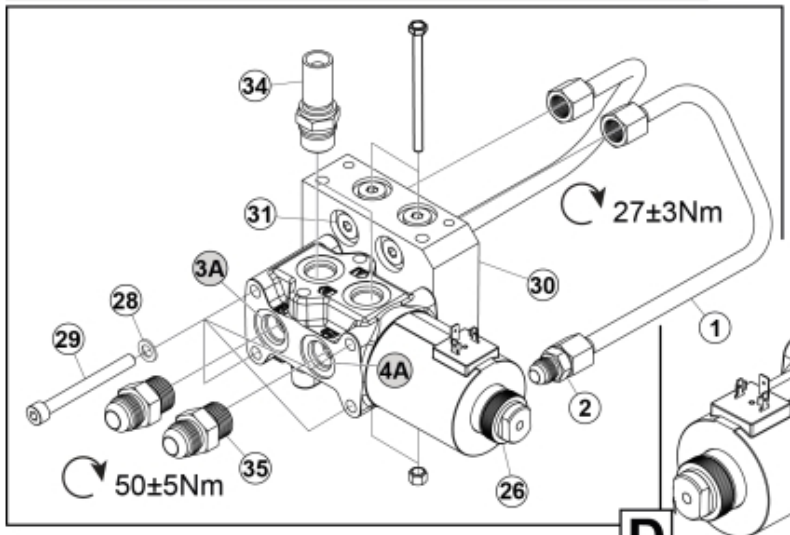
34
31
27±3Nm
3A
30
28
29
1
4A
2
35
50±5Nm
26

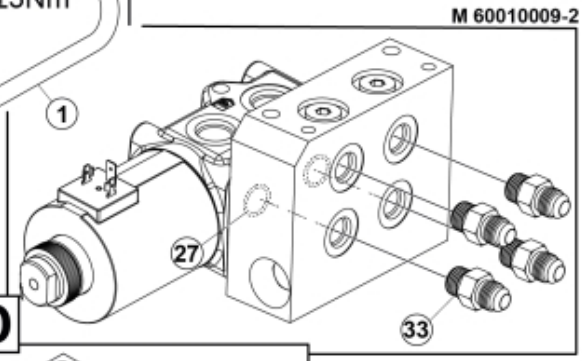
M 60010009-2
27
33

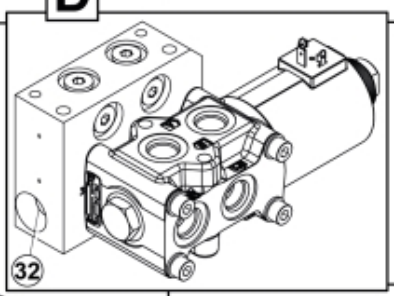
D
32

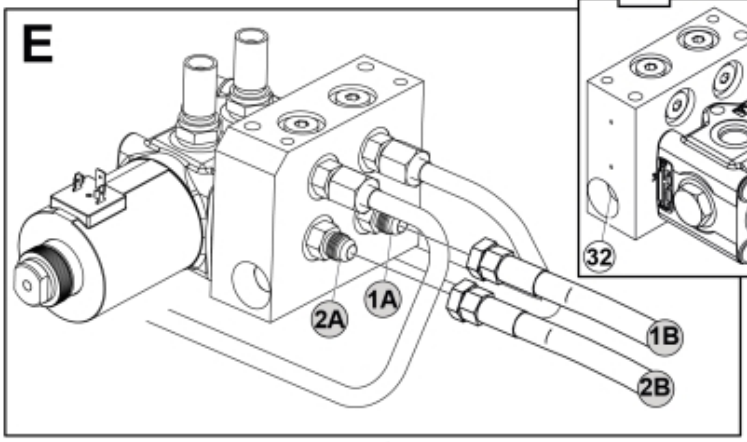
E
2A
1A
1B
2B

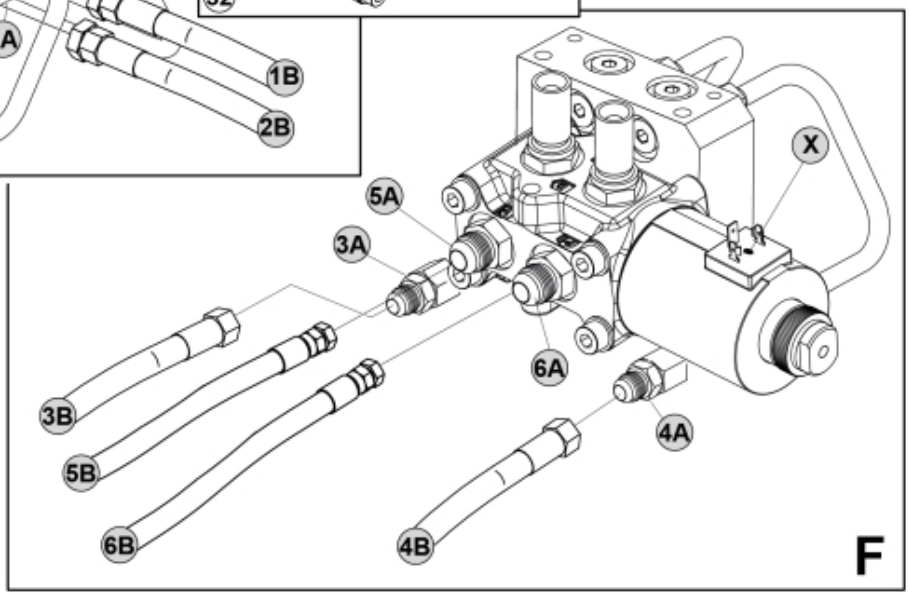
X
5A
3A
6A
3B
4A
5B
6B
4B
F

© 2025 Jost

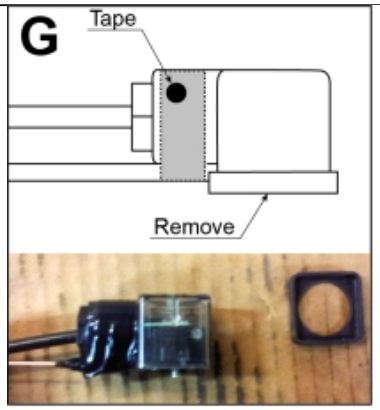

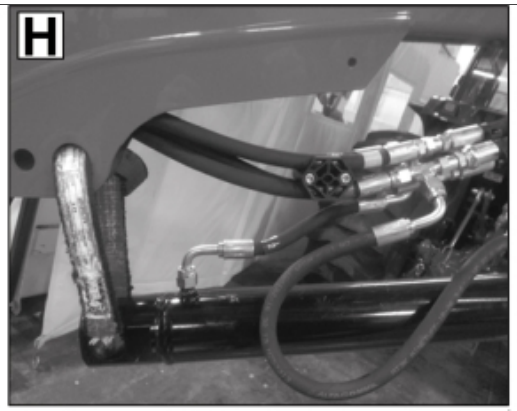

M 60010009-3



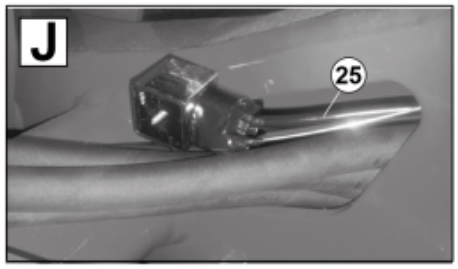

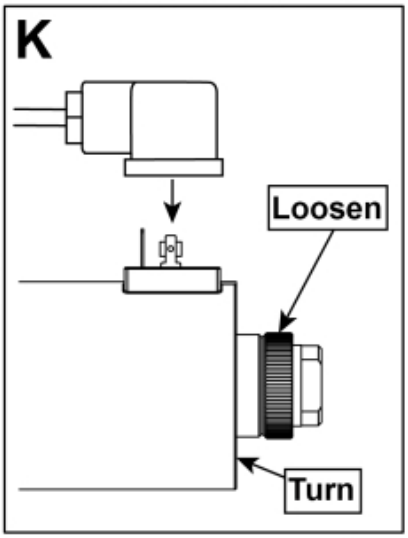

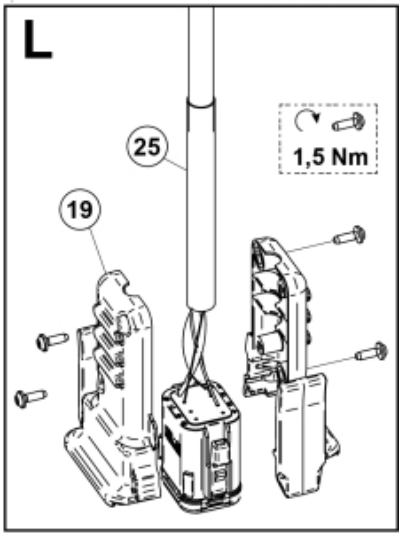

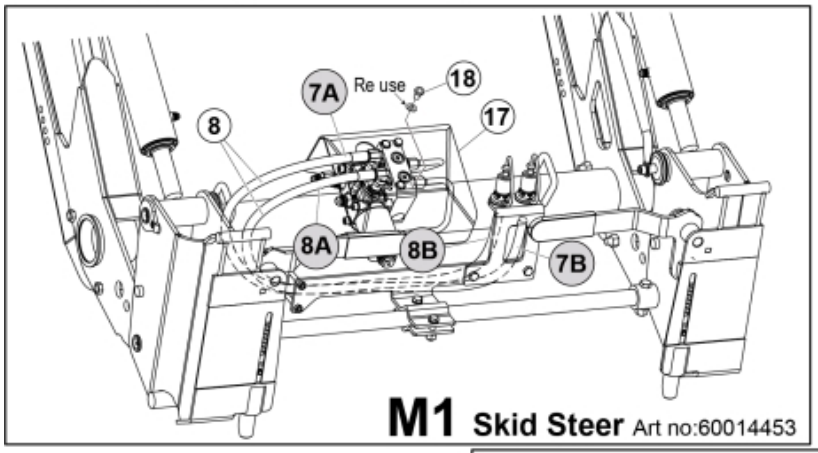

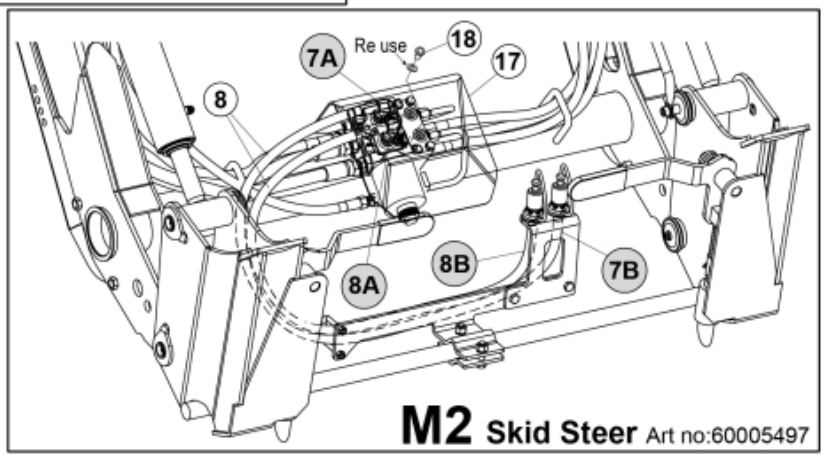

© 2025 Jost

Part assemblies	3rd service
Specification	Year From: 2/1/2016 12:00:00 AM
	Year To: 12/13/2020 12:00:00 AM

PartNo	Pos	Qty	Name	Specifications
60010009		1	3rd service	2/1/2016 12:00:00 AM, 12/13/2020 12:00:00 AM
5221303		2	Oil pipe kit	
5222581	1	1	• Oil pipe	
5028109	2	1	• Adaptor	JIC 9/16"
1103117	8	2	Hose	3/8"
5222579	13	1	• Bracket kit	
5022157		1	• Washer, red	
5022159		1	• Washer, blue	
5044129		2	• Dust Cover	1/2" Male
5044940		2	• Coupling	ISO-A 1/2" Male - G3/8
5222580		1	• Bracket	
5002077	14	2	Screw	M6S 10x30
5013102	15	6	Washer	BRB 10 x 18 x 2
5011554	16	4	Nut	Loc-King M10
60009571	17	1	Protection plate	Replaces 5221270
5002060	18	2	Screw	M6S M8x12 (8,8)
5103054	19	1	Connector handle	
60006545	20	1 PCS	Bracket	
10413486	21	1 PCS	U-bolt	
5011053	22	4	Nut	M6M M8
5002078	23	2	Screw	M6S 10x40 (8.8)
60006548	24	1 PCS	Bracket	
5102206	25	1	Harness	8-pin Deutsch
60010211		1	Control valve	
60009542	26	1	• Valve assy.	Roquet
5050388	27	2	• O-ring	Ø25 0,7x2,62
5013101	28	4	• Washer	BRB 8,4 x 16
5004054	29	4	• Screw	MC6S M8x80
60009550	30	1	• Valve block	
5028121	31	4	• Plug	UNF 9/16
60010115	32	2	• Pressure relief valve	
5028118	33	4	Adapter short cpl.	9/16" UNF JIC
5028262	34	2	Adaptor	
5028078	35	2	Adaptor	3/4" ORB -3/4" JIC

© 2025 Jost