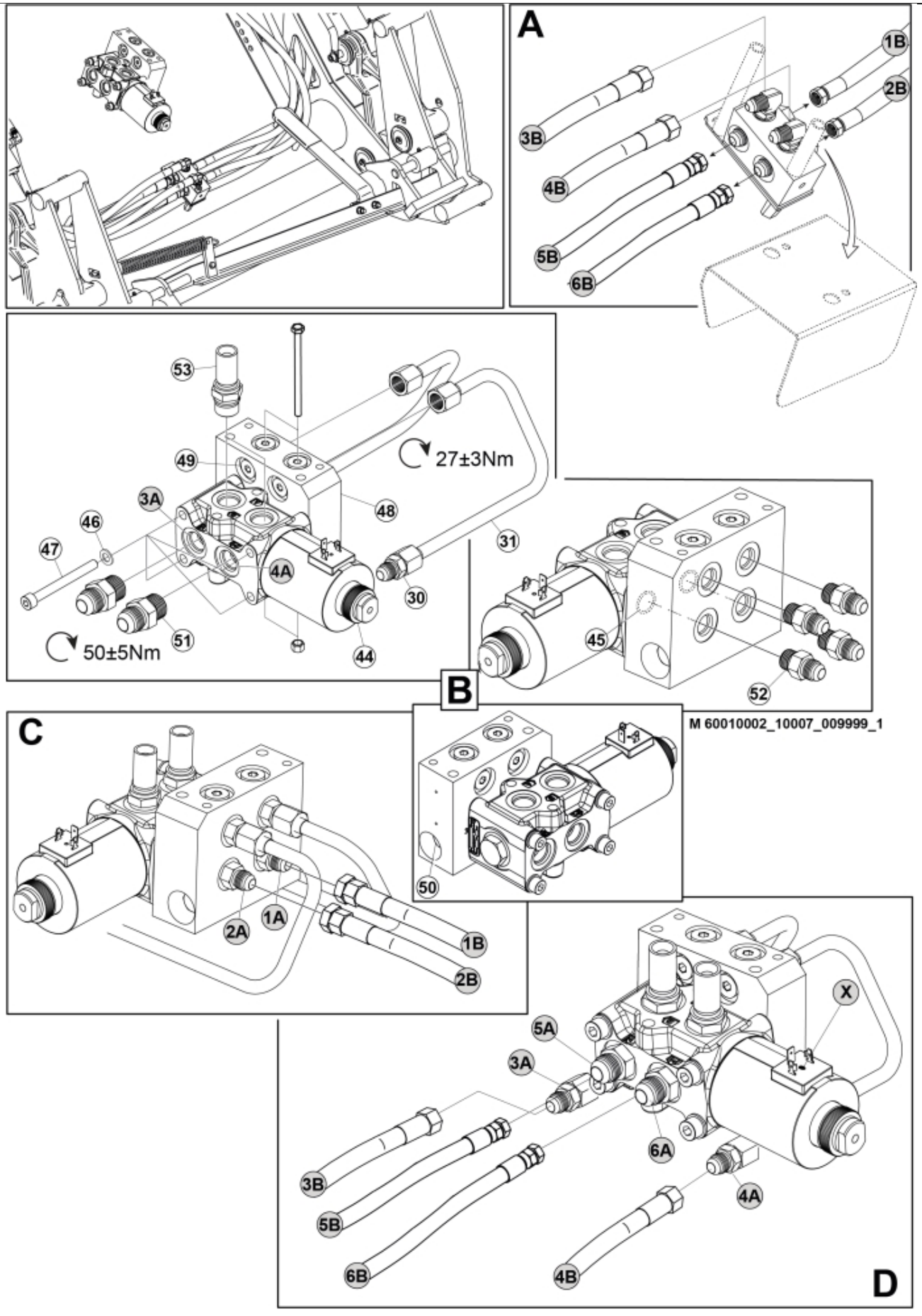
A
1B
2B
3B
4B
5B
6B
53
49
3A
46
47
48
31
4A
30
51
44
27±3Nm
50±5Nm
B
45
52
M 60010002_10007_009999_1
C
50
2A
1A
1B
2B
5A
3A
X
6A
4A
3B
5B
6B
4B
D

© 2025 Jost

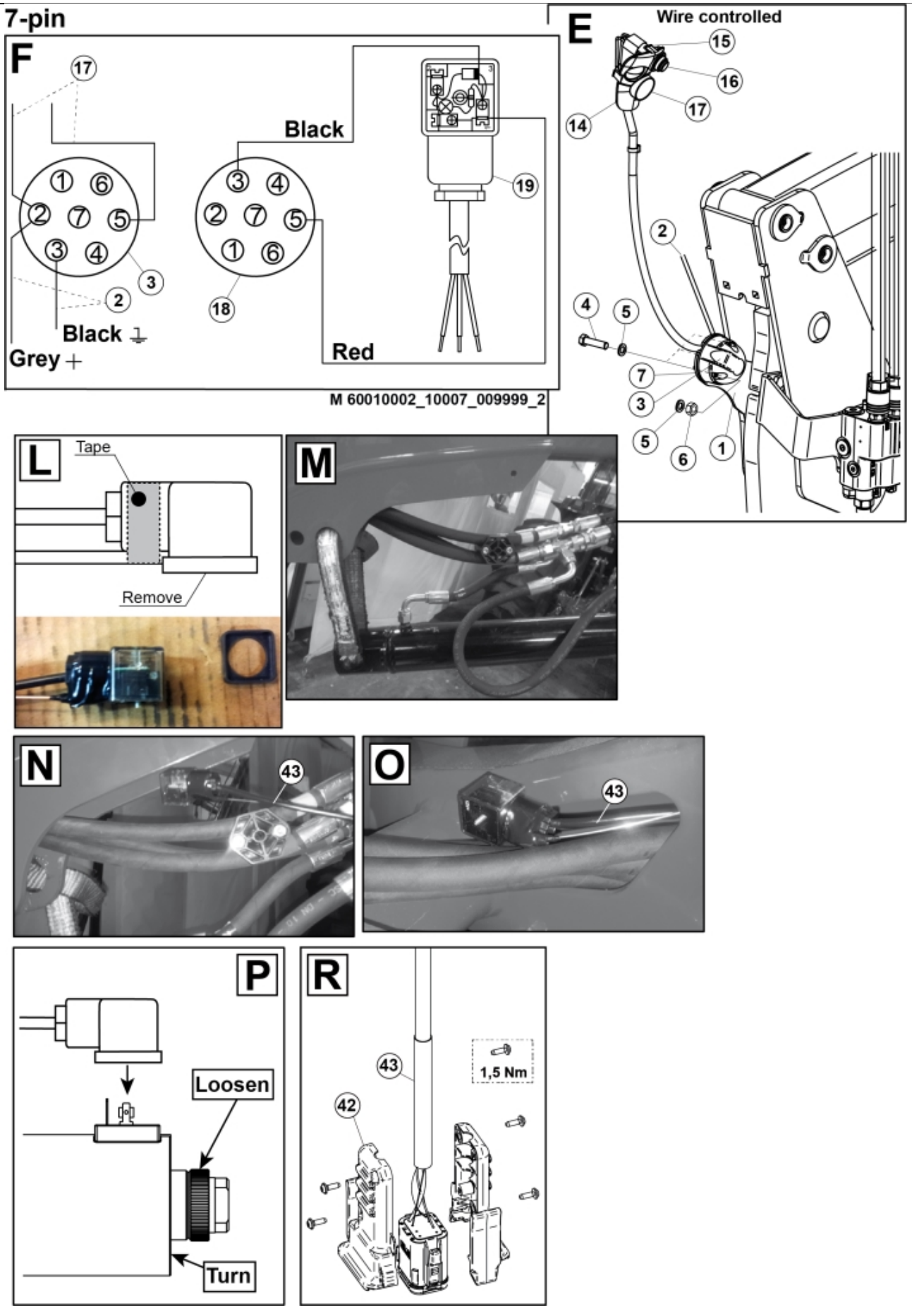
7-pin
F
17
Black
19
18
Black
Grey +
Red
M 60010002_10007_009999_2
E
Wire controlled
15
16
17
14
2
4
5
7
3
5
6
1
L
Tape
Remove
M
N
43
O
43
P
Loosen
Turn
R
43
1,5 Nm
42

© 2025 Jost

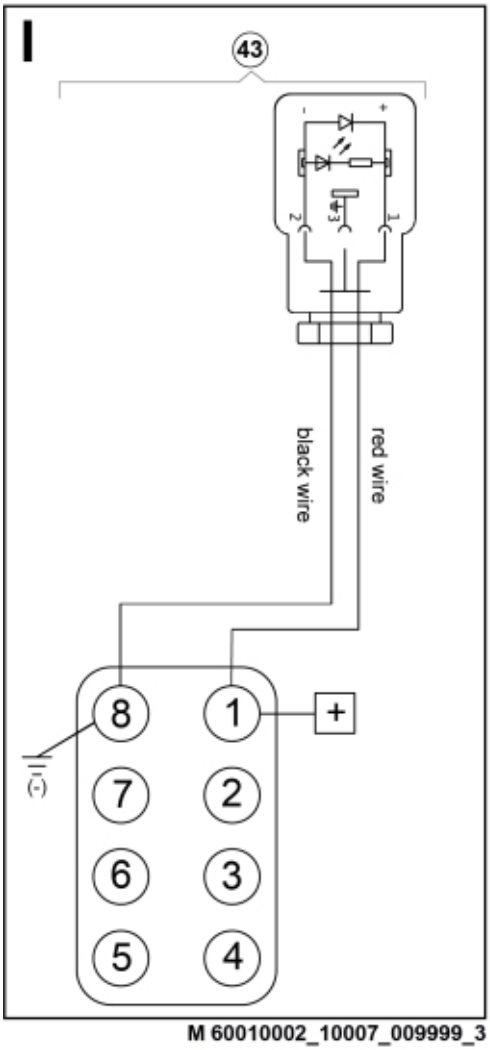

M 60010002_10007_009999_3

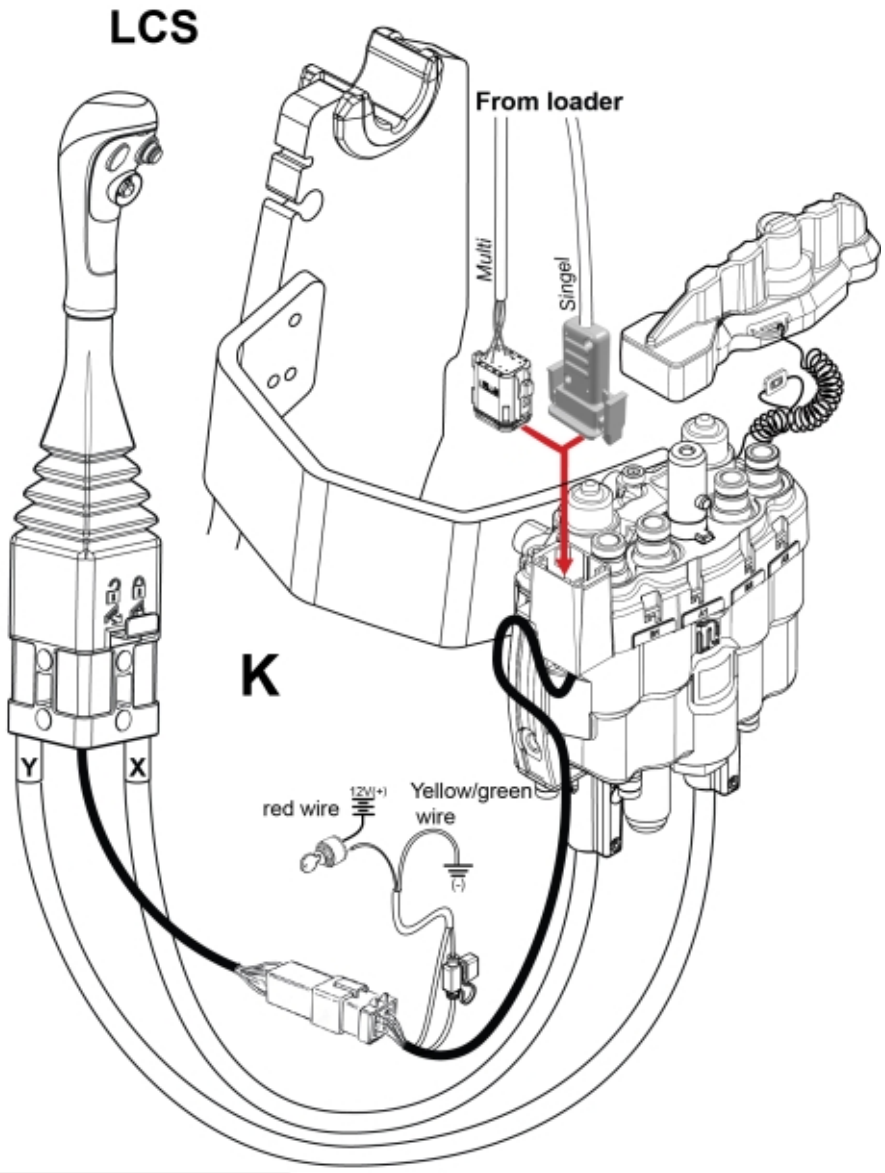

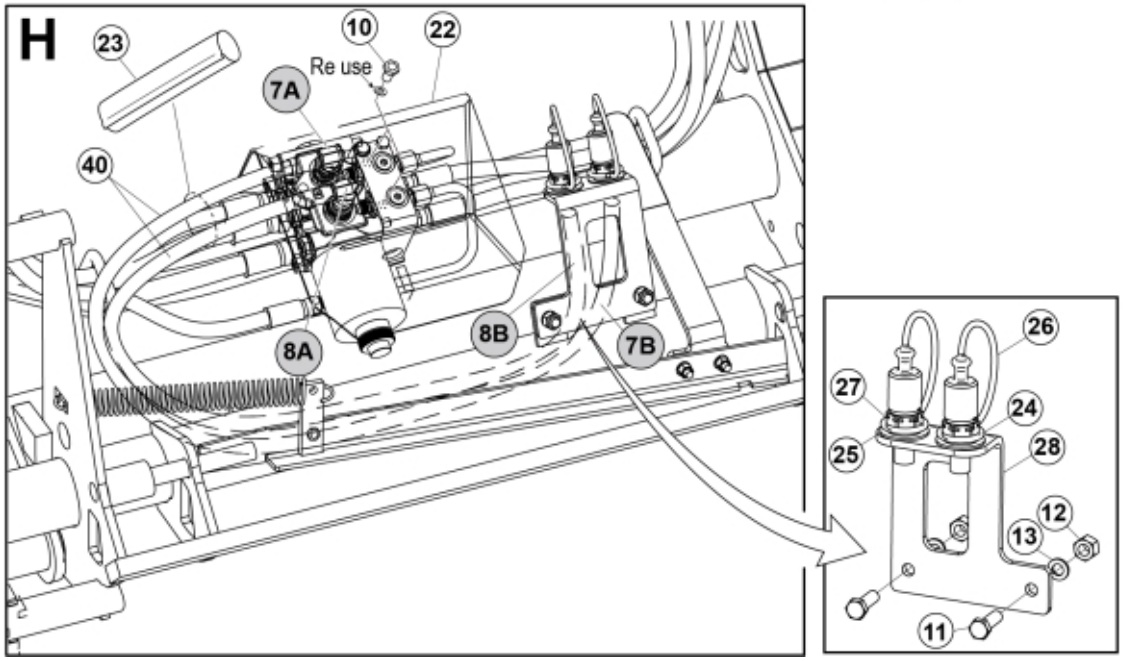

© 2025 Jost

Part assemblies	3rd service
Specification	Year From: 2/1/2016 12:00:00 AM

no harness, Direct:no harness, direct controlled valve

PartNo	Pos	Qty	Name	Specifications
60010002		1	3rd service	2/1/2016 12:00:00 AM
5002060	10	2	Screw	M6S M8x12 (8,8)
5002077	11	2	Screw	M6S 10x30
5011554	12	2	Nut	Loc-King M10
5013102	13	2	Washer	BRB 10 x 18 x 2
60009571	22	1	Protection plate	Replaces 5221270
5221975	23	1	Hose cover	
5222579		1	Bracket kit	
5022157	24	1	• Washer, red	
5022159	25	1	• Washer, blue	
5044129	26	2	• Dust Cover	1/2" Male
5044940	27	2	• Coupling	ISO-A 1/2" Male - G3/8
5222580	28	1	• Bracket	
5221303		2	Oil pipe kit	
5028109	30	1	• Adaptor	JIC 9/16"
5222581	31	1	• Oil pipe	
1103117	40	2	Hose	3/8"
60010211		1	Control valve	
60009542	44	1	• Valve assy.	Roquet
5050388	45	2	• O-ring	Ø25 0,7x2,62
5013101	46	4	• Washer	BRB 8,4 x 16
5004054	47	4	• Screw	MC6S M8x80
60009550	48	1	• Valve block	
5028121	49	4	• Plug	UNF 9/16
60010115	50	2	• Pressure relief valve	
5028078	51	2	Adaptor	3/4" ORB -3/4" JIC
5028118	52	4	Adapter short cpl.	9/16" UNF JIC
5028262	53	2	Adaptor	

© 2025 Jost