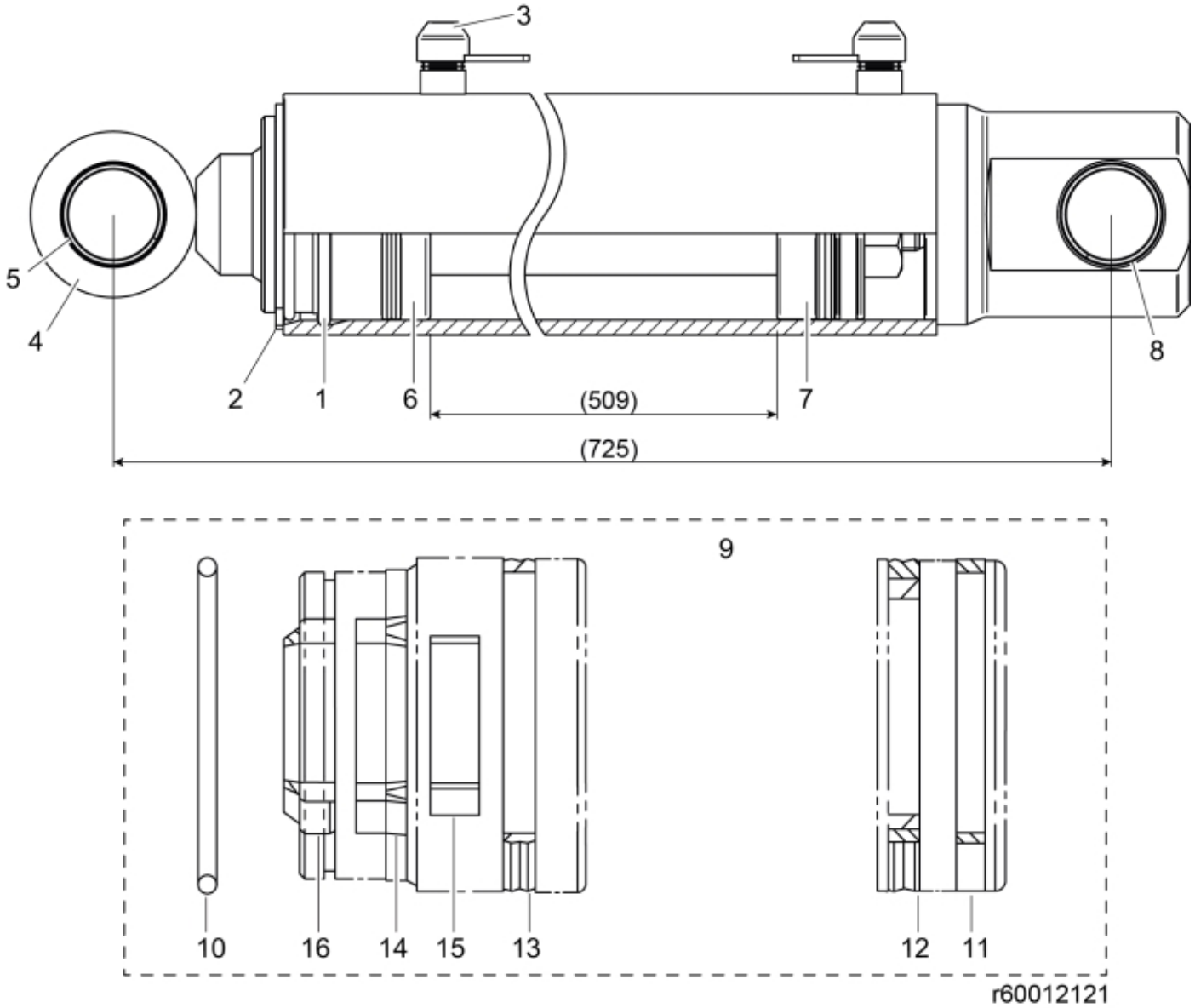

© 2025 Jost

Description	70/40
Part assemblies	Lift Cylinder
Specification	Specification: Glossy Black (12727210)

PartNo	Pos	Qty	Name	Specifications
5016669	1	1	Retaining ring	
5016621	2	1	Retaining ring	
5028083	3	2	Plug	
60020828	4	1	Piston rod cpl.	
5018515	5	2	• Bushing	D30 L=20
12707011	6	1	Bearing	D70/40
12707212	7	1	Piston	D70/40
5018515	8	2	Bushing	D30 L=20
5033704	9	1	Seal kit	
5037243	10	1	• O-ring	63,09x3,53
5040013	11	1	• Guide ring	70/65x5,5
5040023	12	1	• Piston seal	70/54,5x6,3
5039003	13	1	• Cover seal	70 x 64,6 x 6,2
5038254	14	1	• Seal	40/50x10
5040010	15	1	• Guide ring	40/45x9,7
5038101	16	1	• Wiper	40/50x7/10

© 2025 Jost