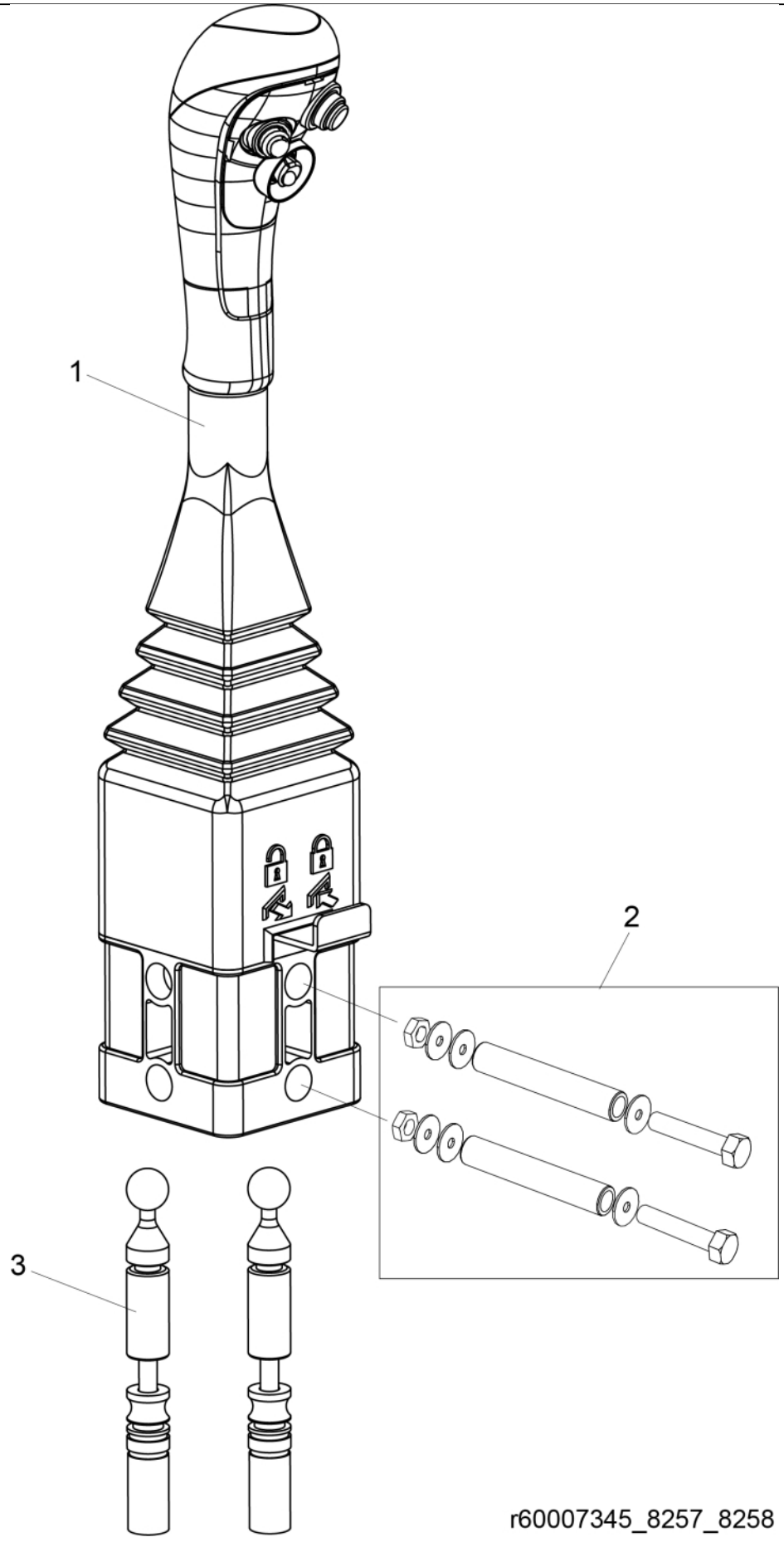

© 2025 Jost

Part assemblies		Lever kit (2600mm)		
Specification		Specification: RH2600		
PartNo	**Pos**	**Qty**	**Name**	**Specifications**
60008258			Lever kit (2600mm)	RH2600
60007359	1	1	• Control lever RH	No float on tilt
5220354	2	1	•• Screw kit	Part is included in kit 5021158 Lever kit (2000mm)
59035260	3	2	• Control cable	L=2600mm

© 2025 Jost