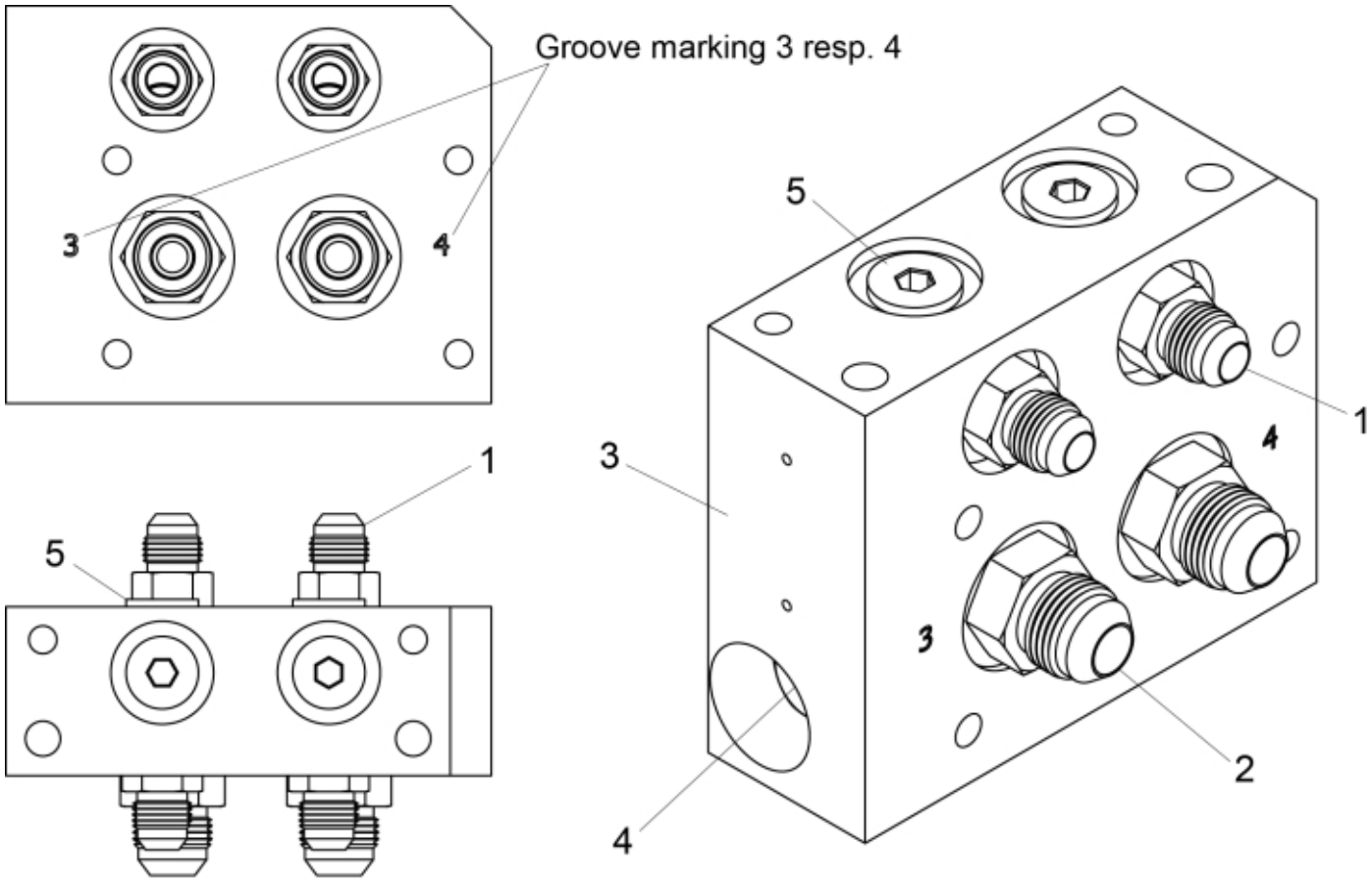

r60009544

© 2025 Jost

Part assemblies	Relief valve cpl.
Specification	Year From: 2/1/2016 12:00:00 AM

PartNo	Pos	Qty	Name	Specifications
60009544			Relief valve cpl.	2/1/2016 12:00:00 AM
5028118	1	4	• Adapter short cpl.	9/16" UNF JIC
5028078	2	2	• Adaptor	3/4" ORB -3/4" JIC
60009550	3	1	• Valve block	
60010115	4	2	• Pressure relief valve	
5028121	5	4	• Plug	UNF 9/16

© 2025 Jost