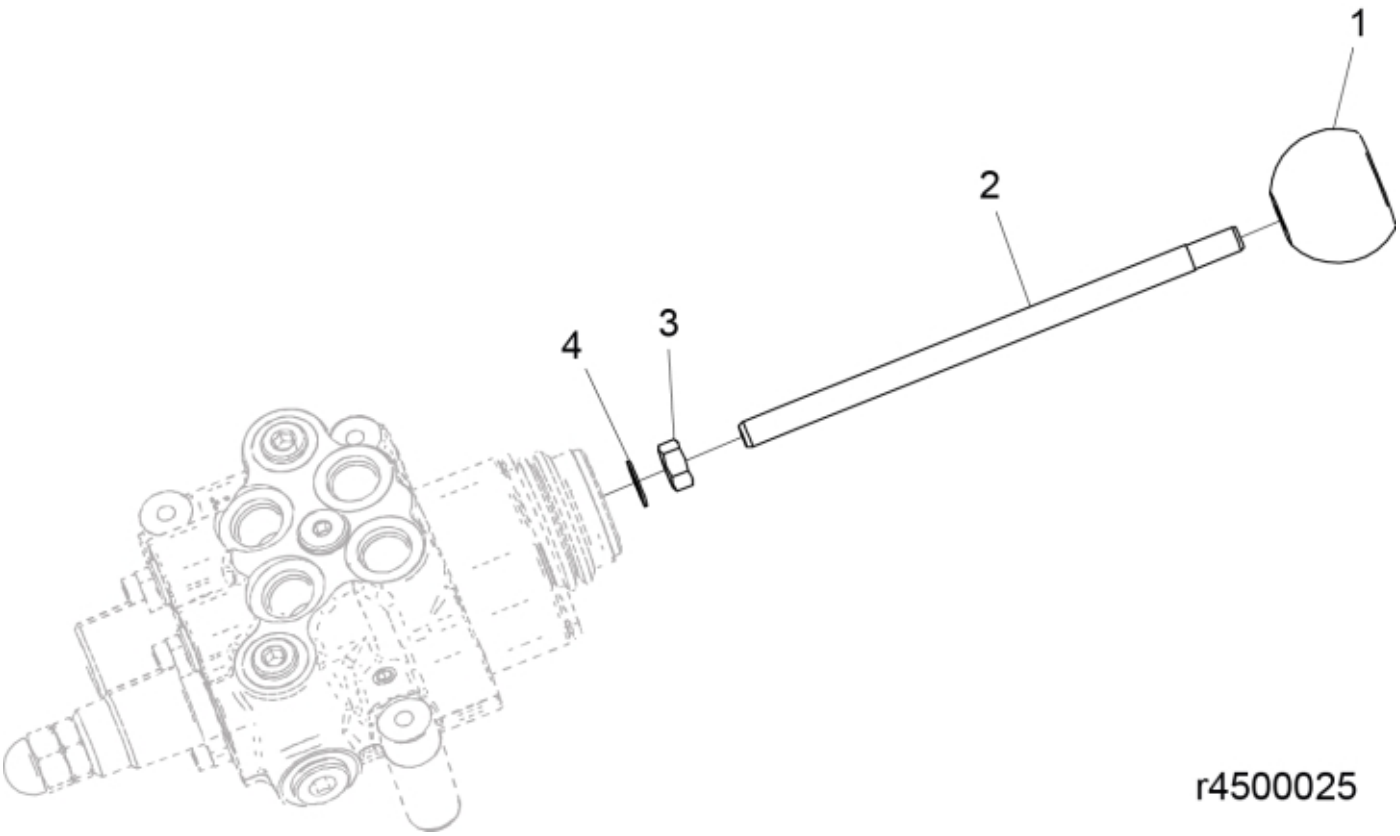

© 2025 Jost

Part assemblies Lever kit

PartNo	Pos	Qty	Name	Specifications
4500025			Lever kit	
60011540	1	1	• Knob	
60011541	2	1	• Lever	
5011054	3	1	• Nut	M6M M10
5013502	4	1	• Spring washer	AZ 10.5x18

© 2025 Jost