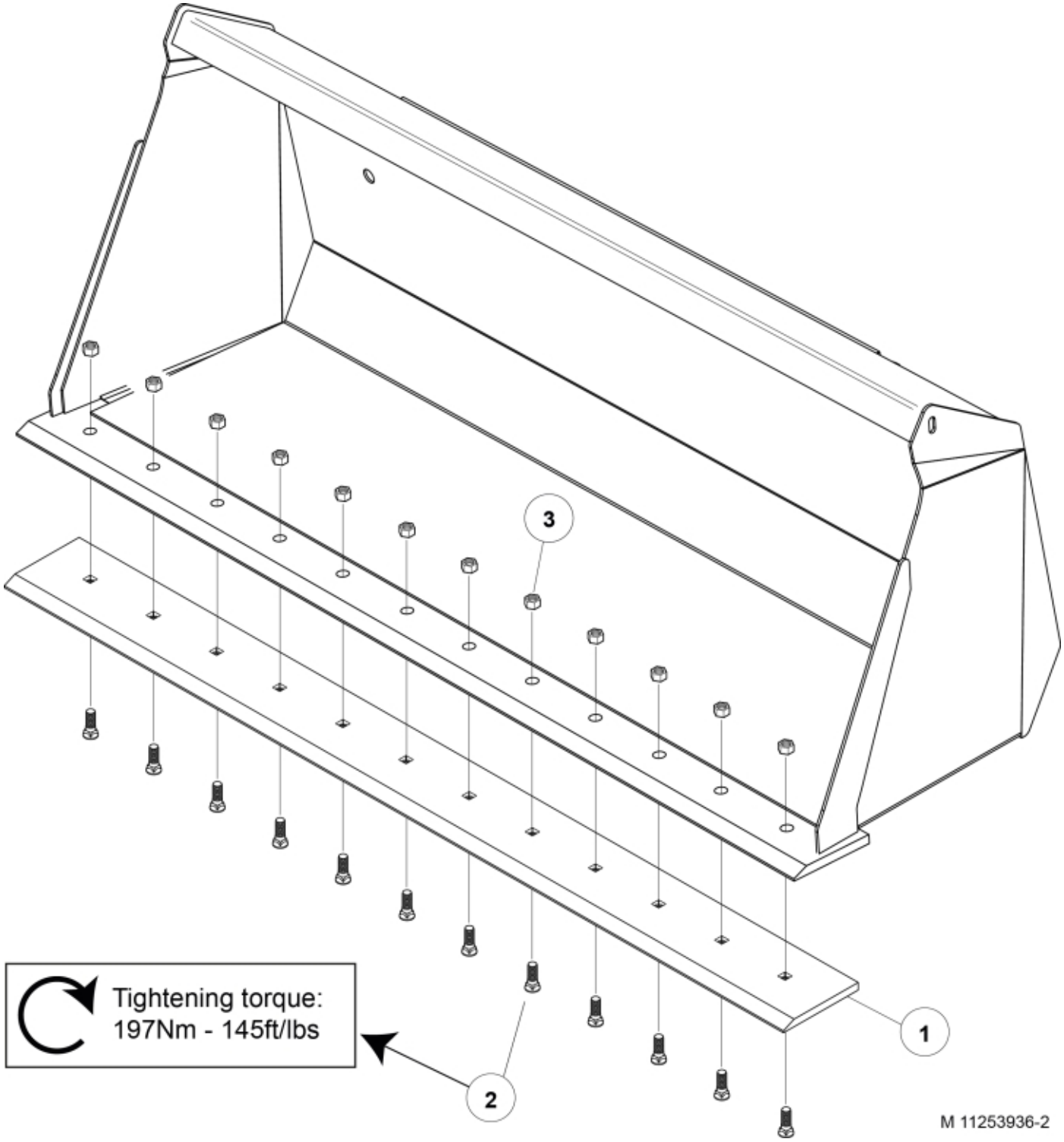

© 2025 Jost

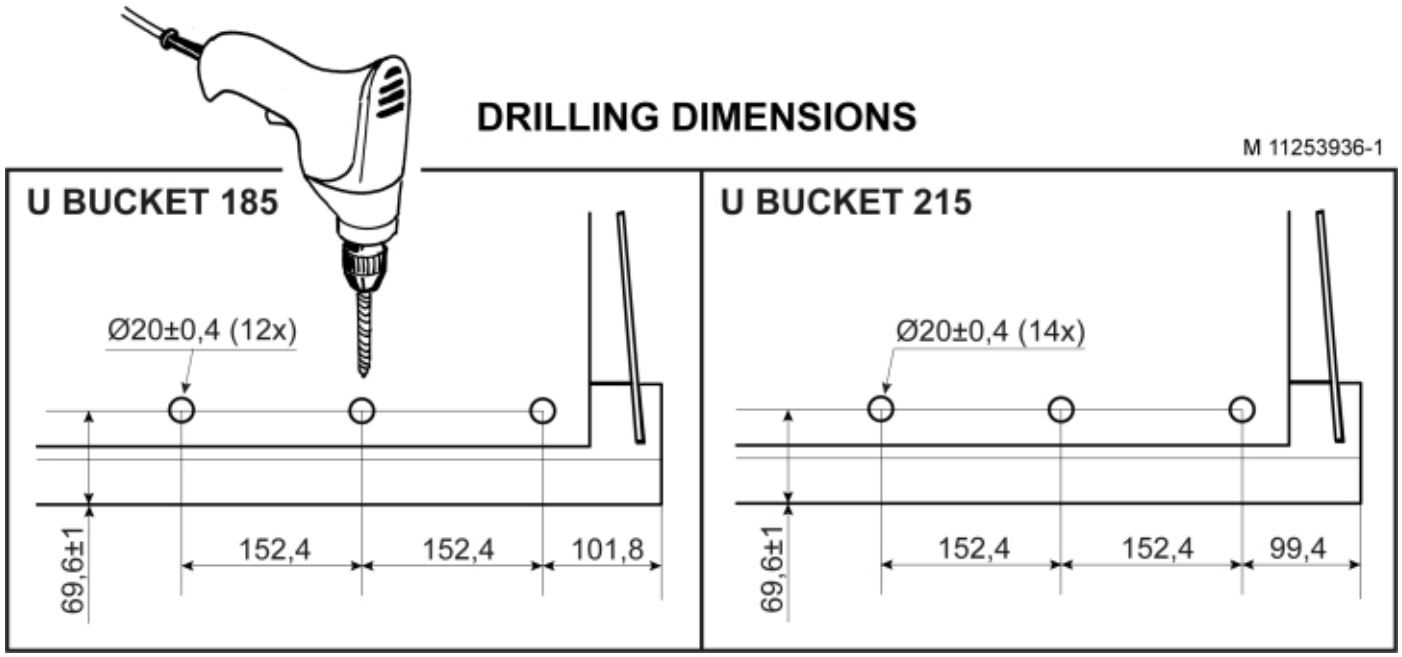
DRILLING DIMENSIONS
M 11253936-1
U BUCKET 185
Ø20±0,4 (12x)
69,6±1
152,4
152,4
101,8
U BUCKET 215
Ø20±0,4 (14x)
69,6±1
152,4
152,4
99,4

© 2025 Jost

Description	215
Part assemblies	Bolt on Cutting Edge kit 215

PartNo	Pos	Qty	Name	Specifications
11254000		1	Bolt on Cutting Edge kit 215	
60012114	1	1 PCS	Cutting edge	Bolt-on
5050364	2	14 PCS	Plow bolt	5/8" - 2 inch
5050485	3	14	Locking nut	UNC 5/8"

© 2025 Jost