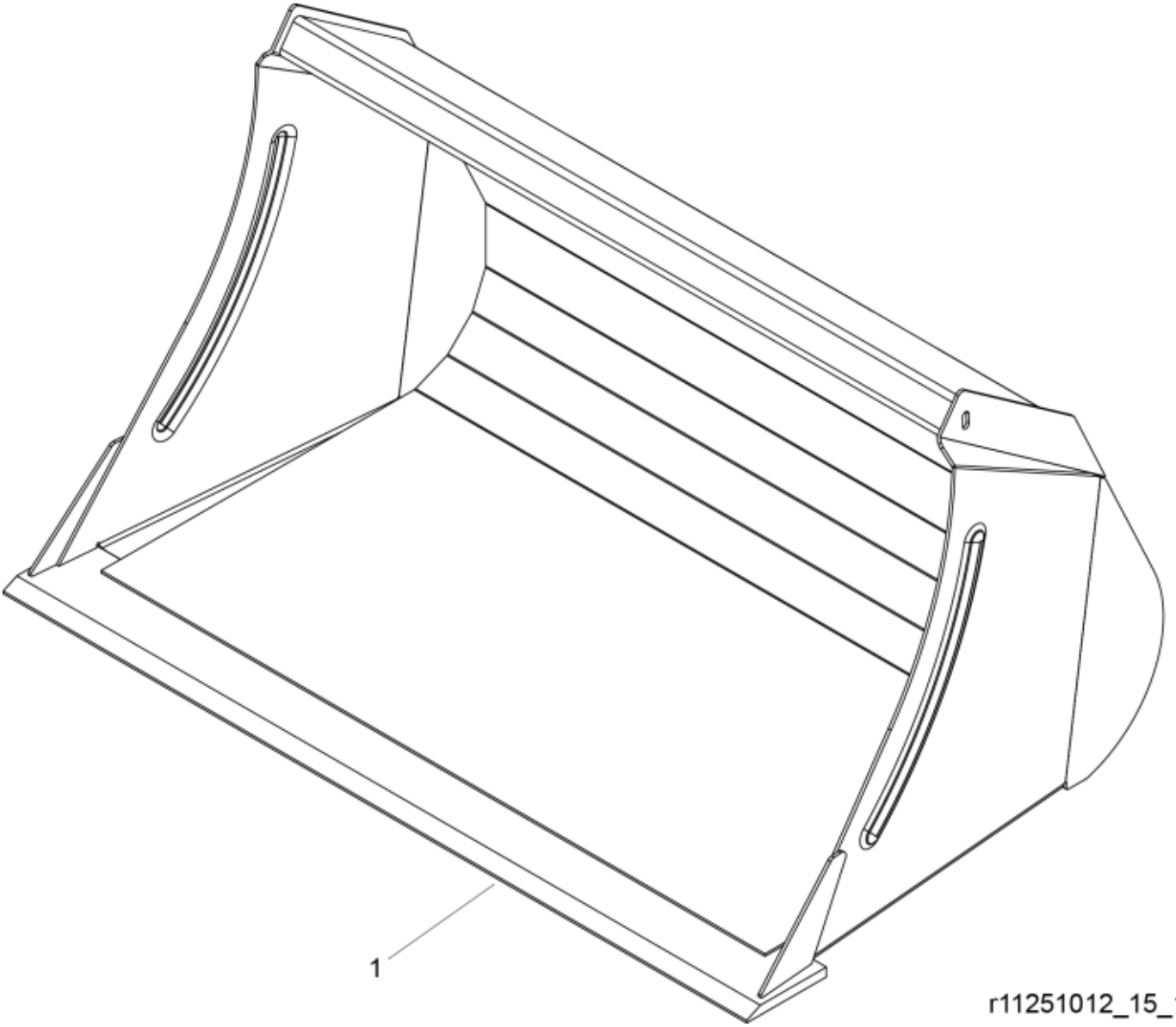

© 2025 Jost

Part assemblies	Bucket 135H MX
Specification	Year From: 1/1/2003 12:00:00 AM

PartNo	Pos	Qty	Name	Specifications
11260035	1	1	Cutting edge	Single Part
5022119		2	Plug	
11137127	2	1 PCS	Decal	"Original Implements"

© 2025 Jost