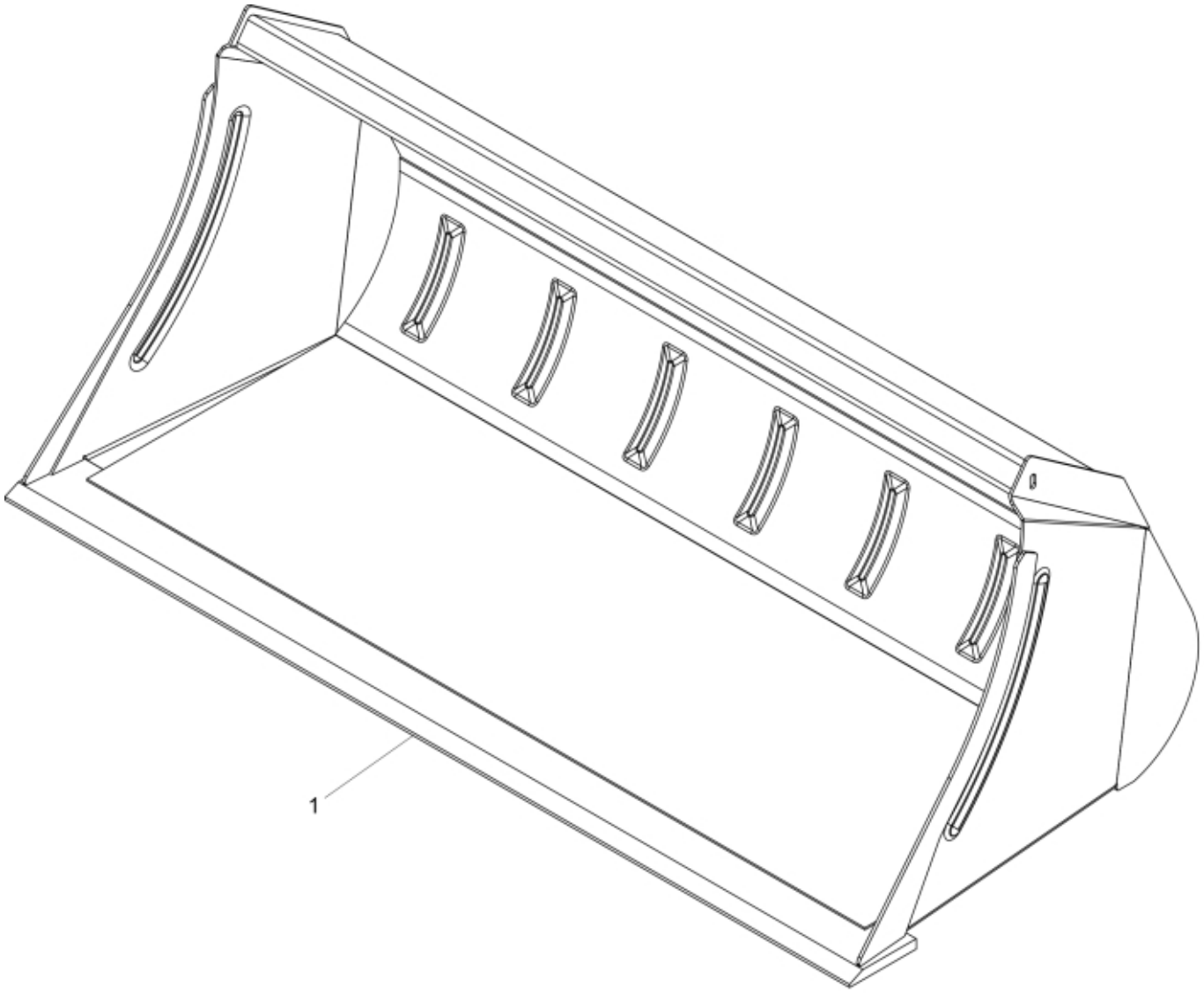

r11251065_68

© 2025 Jost

Part assemblies	Bucket 185HD Euro
Specification	Year From: 1/1/2003 12:00:00 AM
	Year To: 7/31/2020 12:00:00 AM

PartNo	Pos	Qty	Name	Specifications
11260048	1	1	Cutting edge	L=1900
5022119		2	Plug	
11137127	2	1 PCS	Decal	"Original Implements"

© 2025 Jost