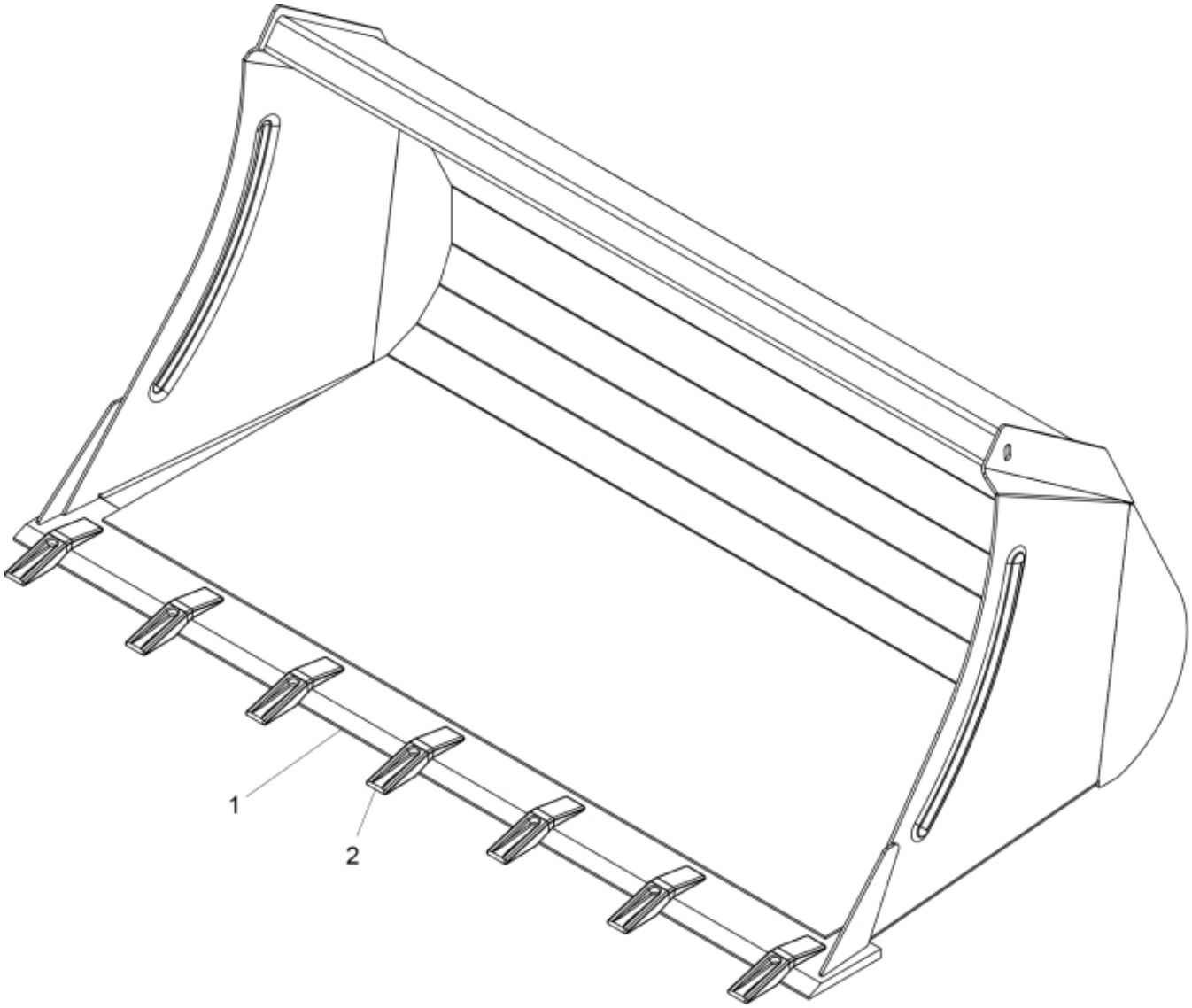

r11251112_15_18

© 2025 Jost

Part assemblies	Bucket 160HT Euro
Specification	Year From: 1/1/2003 12:00:00 AM
	Year To: 4/30/2020 12:00:00 AM

PartNo	Pos	Qty	Name	Specifications
11260036	1	1	Cutting edge	Single Part
11260142	2	7	Bucket tooth	
5022119		2	Plug	
11137127	3	1 PCS	Decal	"Original Implements"

© 2025 Jost