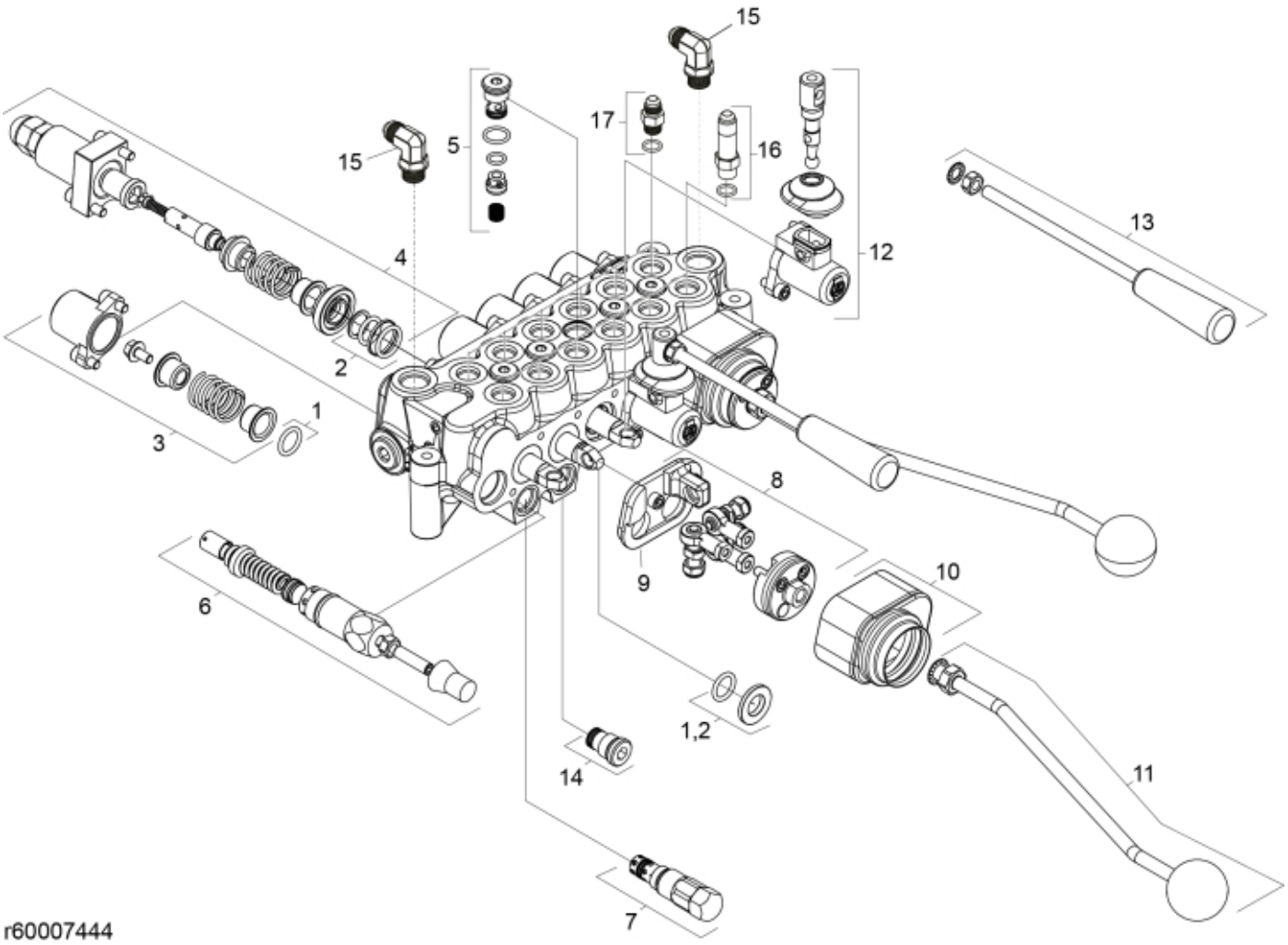

r60007444

© 2025 Jost

Part assemblies Control valve OC Wire (Roquet 2016/05-)

PartNo	Pos	Qty	Name	Specifications
60007444			Control valve OC Wire (Roquet 2016/05-)	
60007445		1	• Valve assy.	
4500023	1	5	•• Seal kit	Tipo 11
4500037	2	1	•• Seal kit	Type 69
4500020	3	5	•• Spool control unit cpl.	
4500026	4	1	•• Spool control unit cpl.	
4500021	5	5	•• Valve	
4500047	6	1	•• Relief valve cpl.	150 bar
4500048	7	4	•• Control valve	160 bar
4501292	8	2	•• Joystick mechanism cpl.	
4501293	9	1	••• Plate	
4500008	10	2	•• Bellows	
4500043	11	2	•• Control lever	
4500044	12	2	•• Joystick mechanism cpl.	
4500045	13	2	•• Control lever	
4500046	14	1	•• Plug kit	
5028181	15	2	• Adaptor	3/4"UNF-3/4"UNF JIC
5028176	16	6	• Adapter long cpl.	
5028118	17	6	• Adapter short cpl.	9/16" UNF JIC

© 2025 Jost