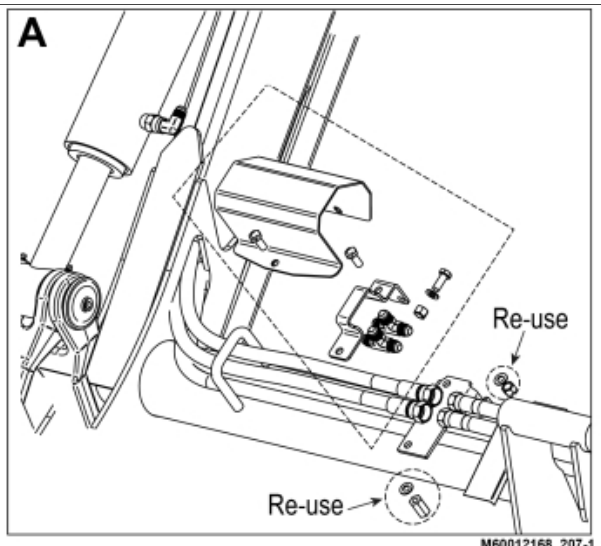
A
Re-use
Re-use
M60012168_207-1

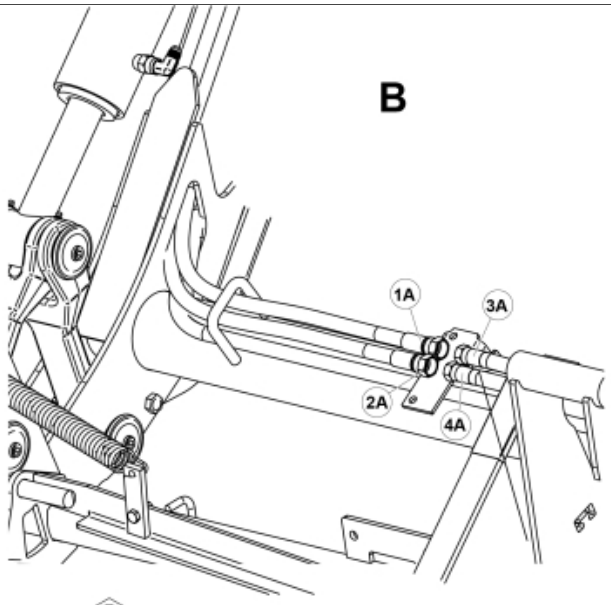
B
1A
3A
2A
4A

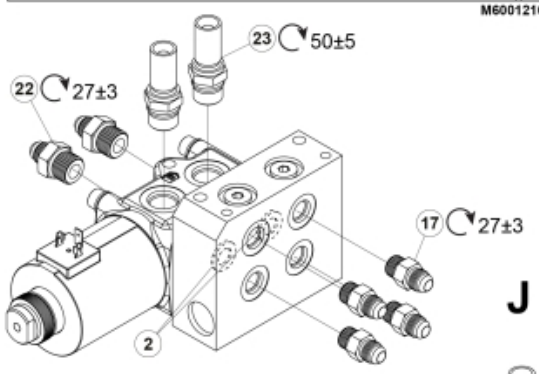
23 50±5
22 27±3
17 27±3
2

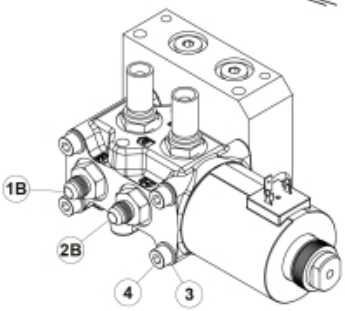
1B
2B
4
3

J

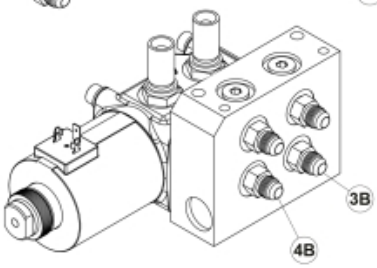
3B
4B

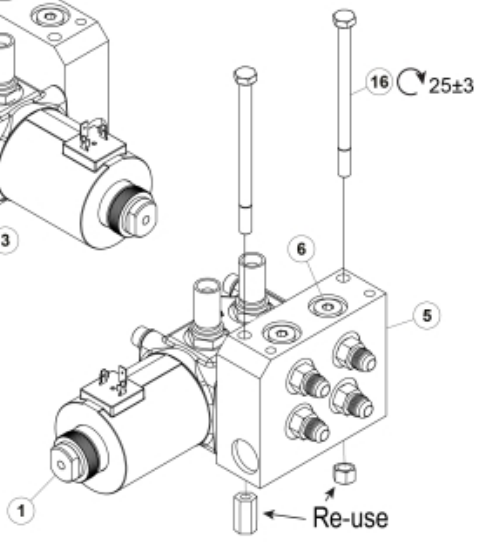
16 25±3
6
5
1
Re-use

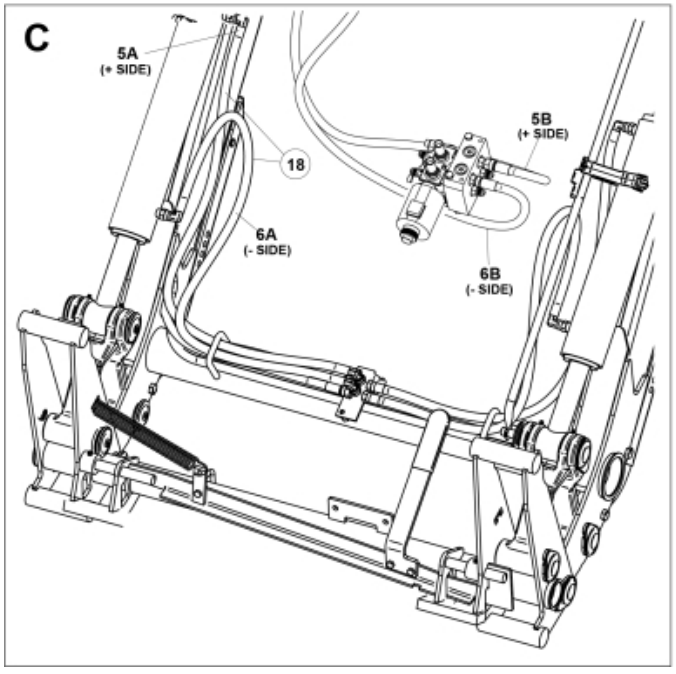
C
5A
(+ SIDE)
18
6A
(- SIDE)
5B
(+ SIDE)
6B
(- SIDE)

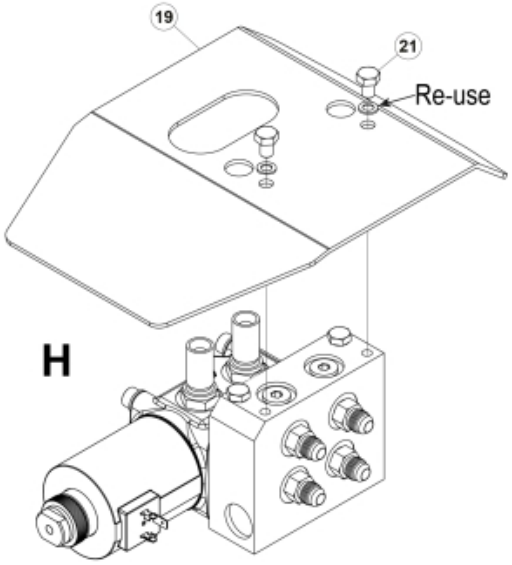
19
21
Re-use
H

© 2025 Jost

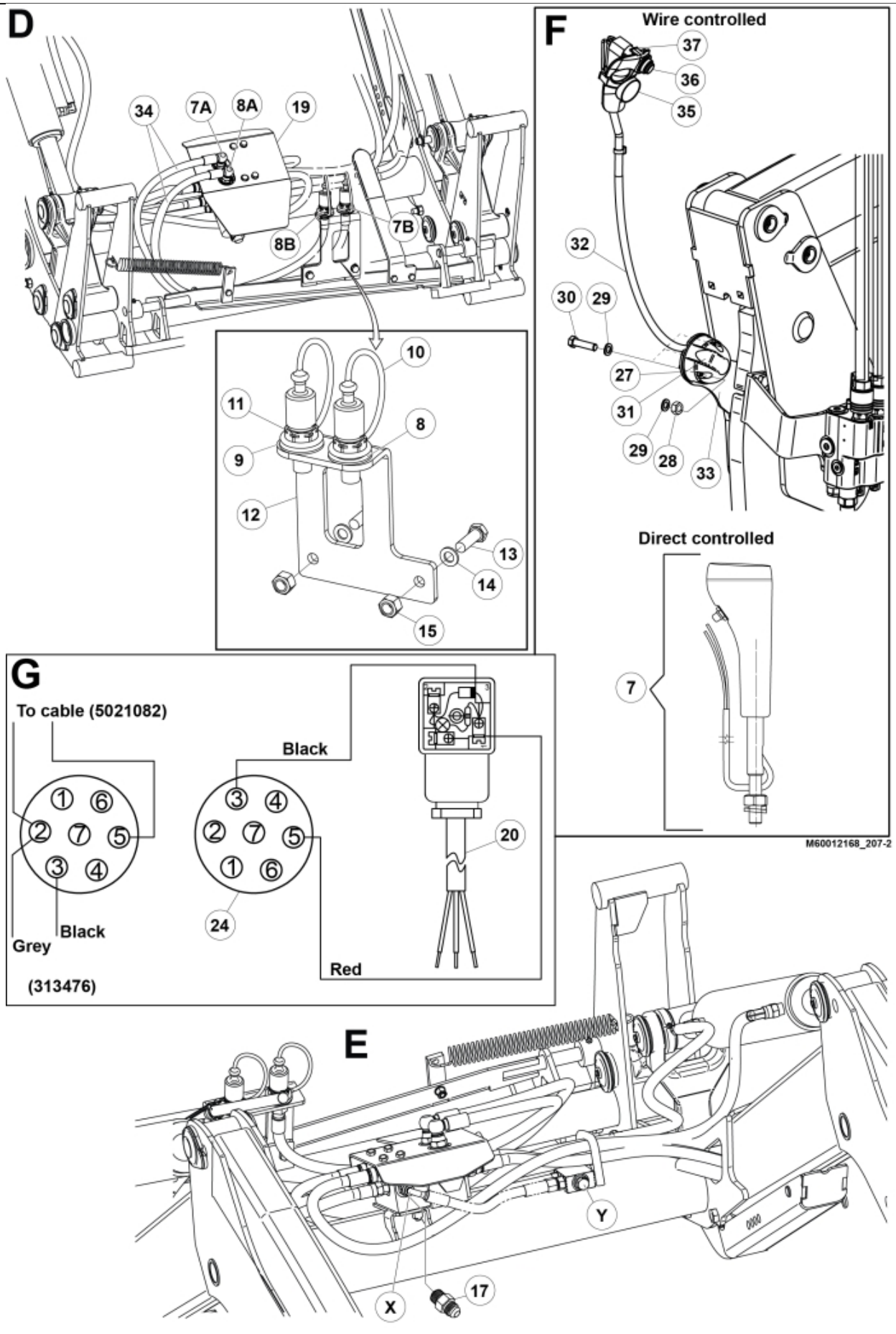
D
34
7A
8A
19
8B
7B
10
11
8
9
12
13
14
15
F
Wire controlled
37
36
35
32
30
29
27
31
29
28
33
Direct controlled
7
M60012168_207-2
G
To cable (5021082)
Black
20
24
Grey
Black
Red
(313476)
E
Y
X
17

© 2025 Jost

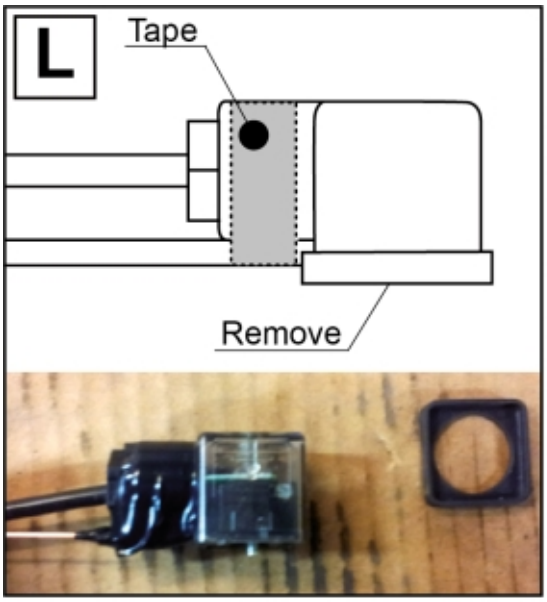

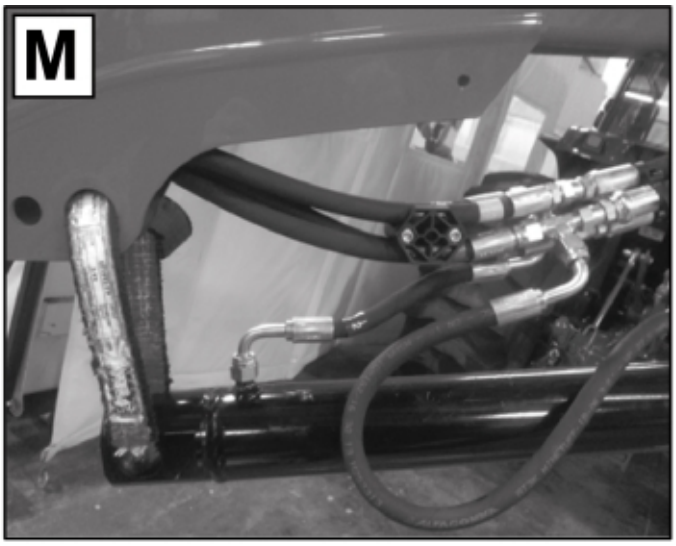



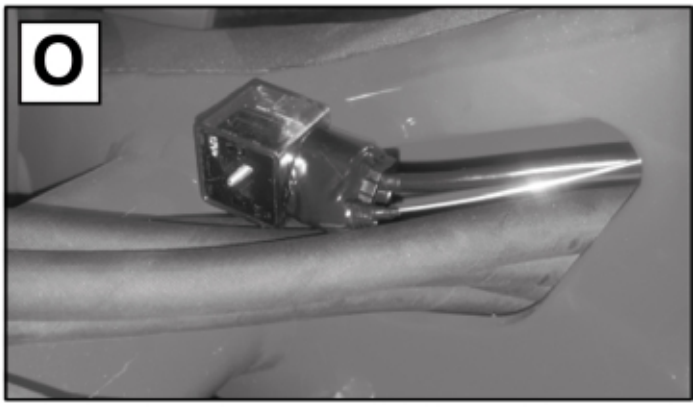

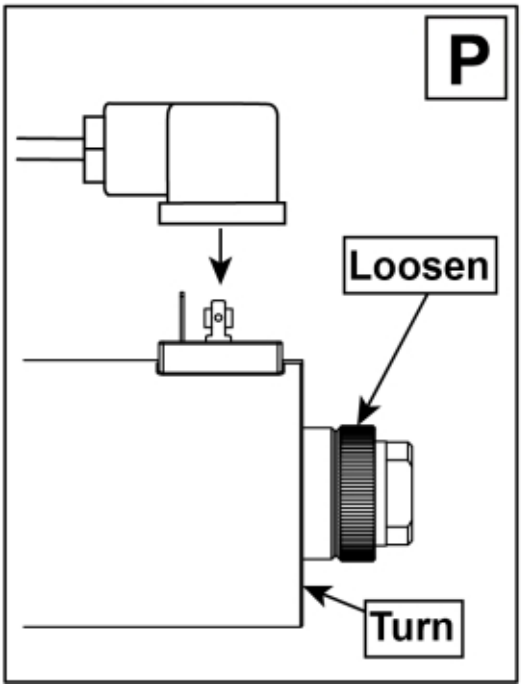

© 2025 Jost

Part assemblies		3rd service - Wire		
Specification		Year From: 2/1/2016 12:00:00 AM		
PartNo	**Pos**	**Qty**	**Name**	**Specifications**
60012168		1	3rd service - Wire	2/1/2016 12:00:00 AM
60011666		1 PCS	Control valve	
60009542	1	1	Valve assy.	Roquet
5050388	2	2	• O-ring	Ø25 0,7x2,62
5013101	3	4	• Washer	BRB 8,4 x 16
5004054	4	4	• Screw	MC6S M8x80
60011591	5	1	• Valve block	
5028121	6	3	• Plug	UNF 9/16
5222579		1	Bracket kit	
5022157	8	1	• Washer, red	
5022159	9	1	• Washer, blue	
5044129	10	2	• Dust Cover	1/2" Male
5044940	11	2	• Coupling	ISO-A 1/2" Male - G3/8
5222580	12	1	• Bracket	
5002077	13	2	Screw	M6S 10x30
5013102	14	2	Washer	BRB 10 x 18 x 2
5011554	15	2	Nut	Loc-King M10
5002978	16	2	Screw	M6S 8x129
5028118	17	5	Adapter short cpl.	9/16" UNF JIC
9031913	18	2 PCS	Hose	3/8 1370 4
60012169	19	1 PCS	Protection plate	
5102152	20	1	Cable	L=4400mm
5002060	21	2	Screw	M6S M8x12 (8,8)
5028119	22	2	Adaptor	JIC 9/16 UNF 3/4
5028262	23	2	Adaptor	
5024379	24	1	Connector	
313497		1	Electric mounting kit	
5033621	25	5	• Cable tie	4.6x150
5103017	26	1	• Cable terminal	
5102039	27	1	• Rubber boot	For caravan connector
5011051	28	3	• Nut	M6M 5
5013112	29	6	• Washer	5,3x10x1,5
5004903	30	3	• Screw	MC6S 5x50 (8.8 fz)
5024378	31	1	• Connector, female	7-Pole
313476	32	1	• Electr. Cable	
5201142	33	1	• Connector Support	
1103117	34	2	Hose	3/8"
5021082	35	1	Boot	1 switch
5024366	36	1	• Boot	A 294814
5024365	37	1	• Switch	A 294813

© 2025 Jost