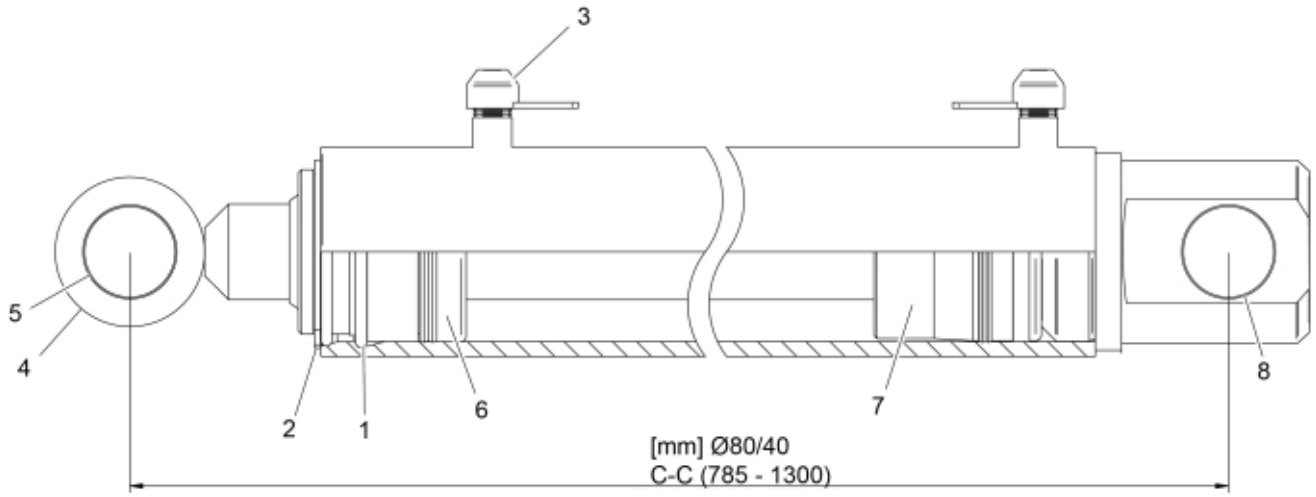

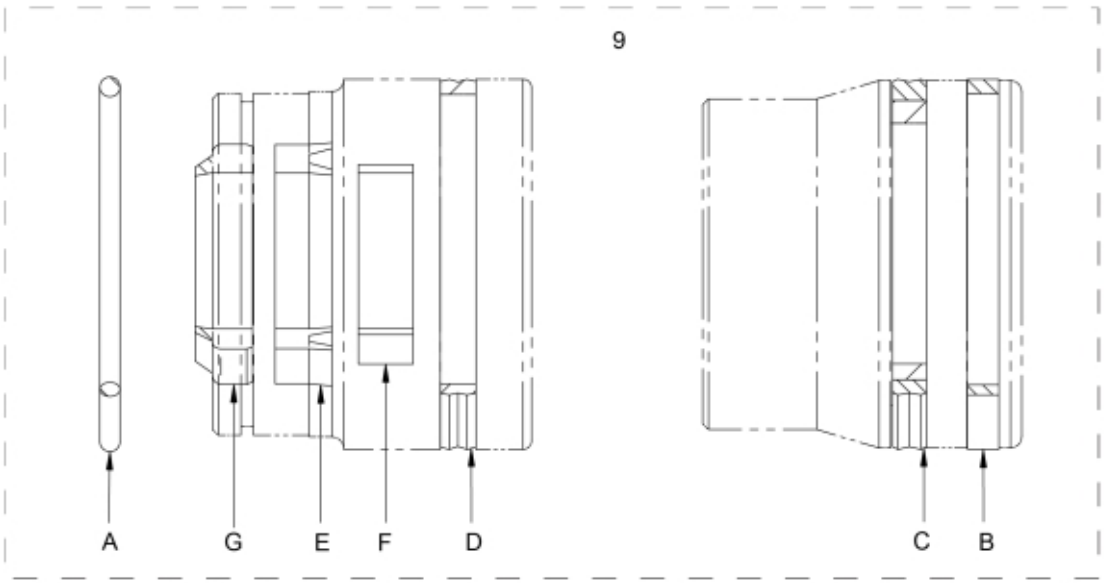

r60009661

© 2025 Jost

Description	80/40
Part assemblies	Lift Cylinder
Specification	Specification: Glossy Black (12727610)

PartNo	Pos	Qty	Name	Specifications
5016667	1	1	Retaining ring	
5016620	2	1	Retaining ring	
5028083	3	2	Plug	
60020826	4	1	Piston rod cpl.	
5018515	5	2	• Bushing	D30 L=20
12708011	6	1	Bearing	D80/40
12708012	7	1	Piston	D80
5018515	8	2	Bushing	D30 L=20
5033706	9	1	Seal kit	
5037241	A	1	• O-ring	72,62 x 3,53
5040015	B	1	• Guide ring	80/75 x 5,5
5040025	C	1	• Piston seal	80/64,5 x 6,3
5039005	D	1	• Cover seal	80 x 73,6 x 6,4
5038254	E	1	• Seal	40/50x10
5040010	F	1	• Guide ring	40/45x9,7
5038101	G	1	• Wiper	40/50x7/10

© 2025 Jost