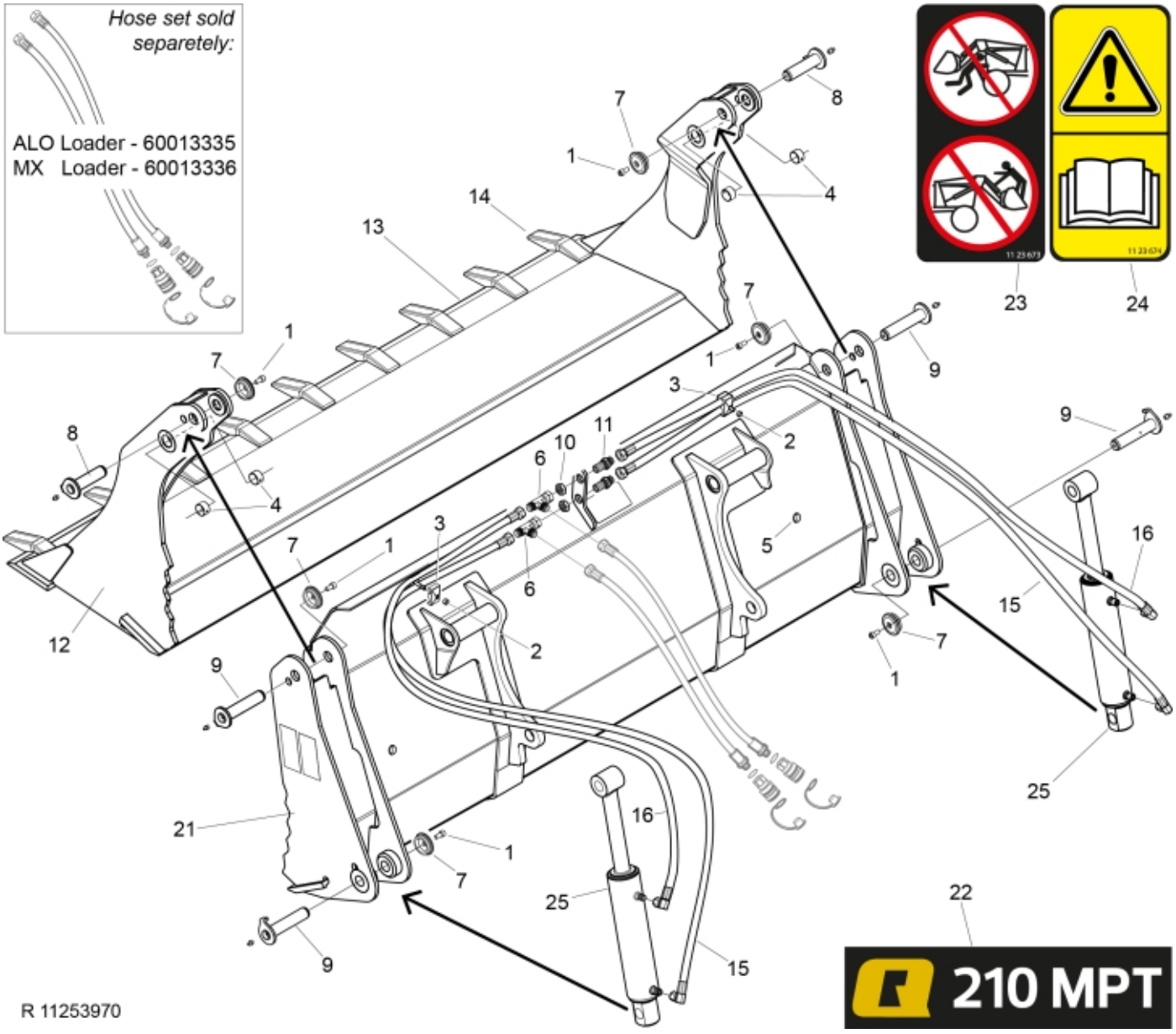
Hose set sold separetely:
ALO Loader - 60013335
MX Loader - 60013336
R 11253970
210 MPT

© 2025 Jost

Part assemblies	Multipurpose 210MPT MX
Specification	Year From: 1/1/2012 12:00:00 AM
	Year To: 8/31/2022 12:00:00 AM

PartNo	Pos	Qty	Name	Specifications
11253970			Multipurpose 210MPT MX	1/1/2012 12:00:00 AM, 8/31/2022 12:00:00 AM
5004917	1	6	Screw	
5011553	2	2	Nut	M6M M8 Loc-king
5016968	3	2	Hose clamp	
5018515	4	4	Bushing	D30 L=20
5022119	5	2	Plug	
5028031	6	2	T-Adapter	
5215131	7	6	Locking cover	
9020105	8	2	Pivot Pin	D=30, L=113mm
60019853	9	4	Pin	D=30 L=141 (replaces 5220060)
5011757	10	2	Nut	
1120159	11	2	Adaptor	
11262305	12	1 PCS	Grab head	
11260038	13	1	• Cutting edge	Single Part
11260142	14	9	• Bucket tooth	
60013128		1 PCS	Hose kit	
9032164	15	2 PCS	• Hose	3/8" L=1350mm
9032162	16	2 PCS	• Hose	3/8" L=1150mm
60011427-17	21	1 PCS	Frame	Multi Purpose 210 MP/MPT MX
11137155	22	1 PCS	Decal	210 MPT
1123673	23	1	Warning decal	
1123674	24	1	Warning decal	"Read manual"
60110579-1	25	2	Cylinder	

© 2025 Jost