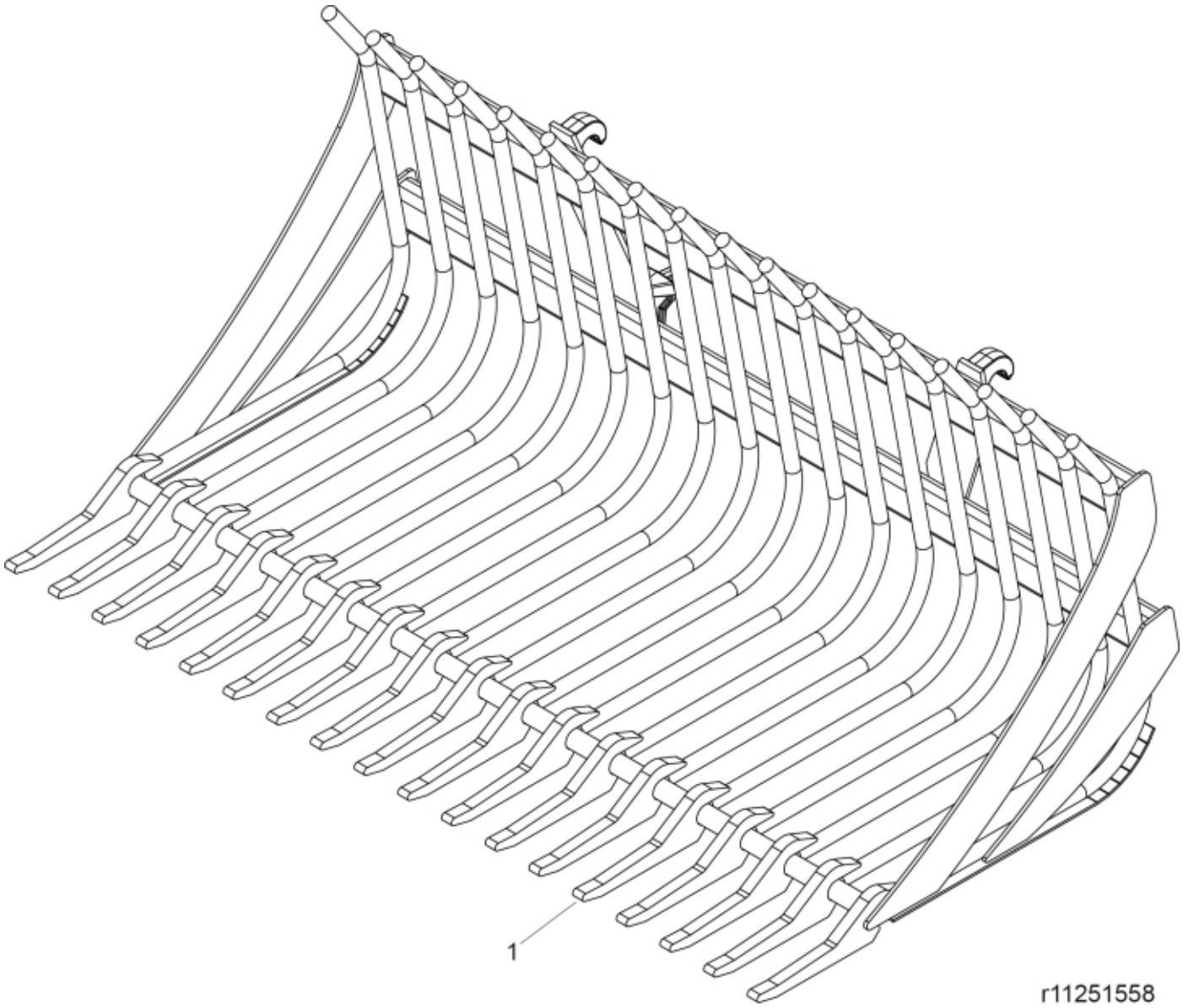

© 2025 Jost

Part assemblies	Stone Fork 200 Euro
Specification	Year From: 1/1/2003 12:00:00 AM
	Year To: 9/30/2017 12:00:00 AM

PartNo	Pos	Qty	Name	Specifications
11260160	1	18	Tooth	

© 2025 Jost