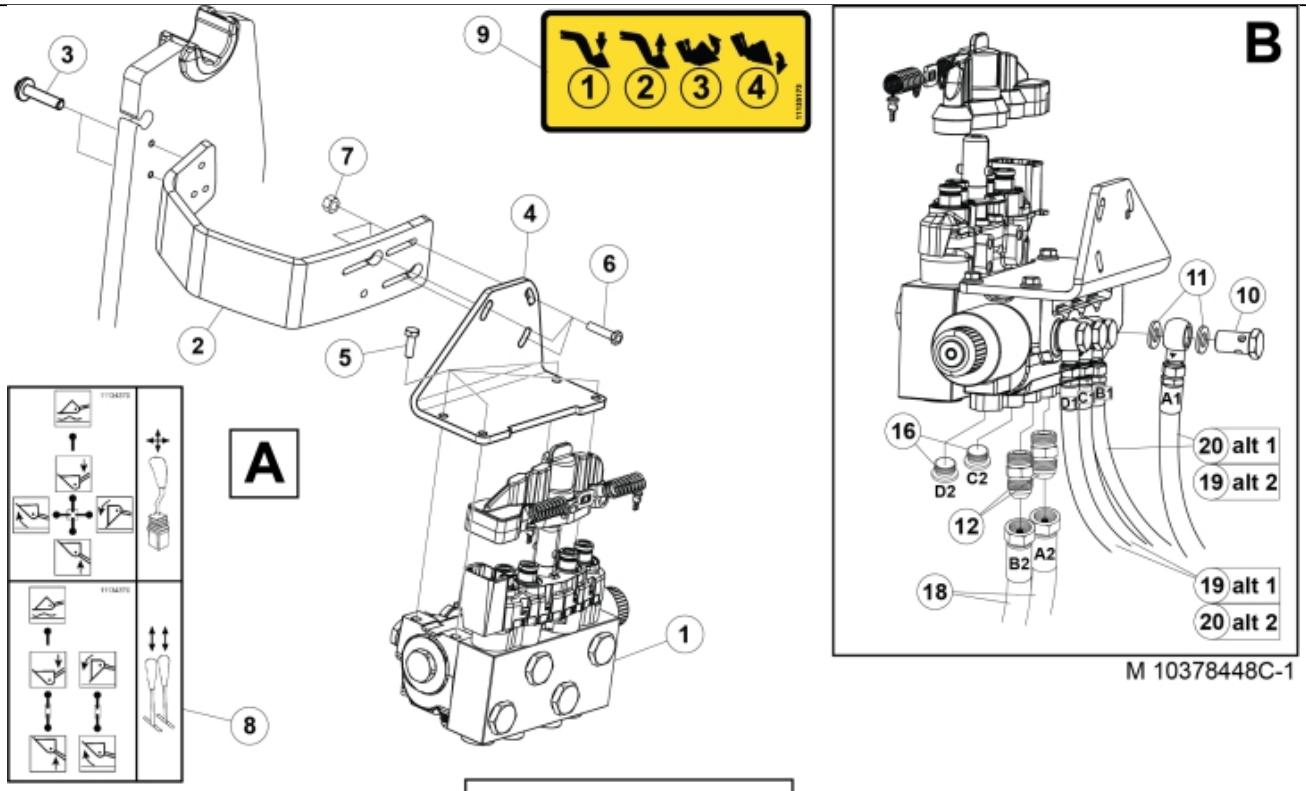

M 10378448C-1

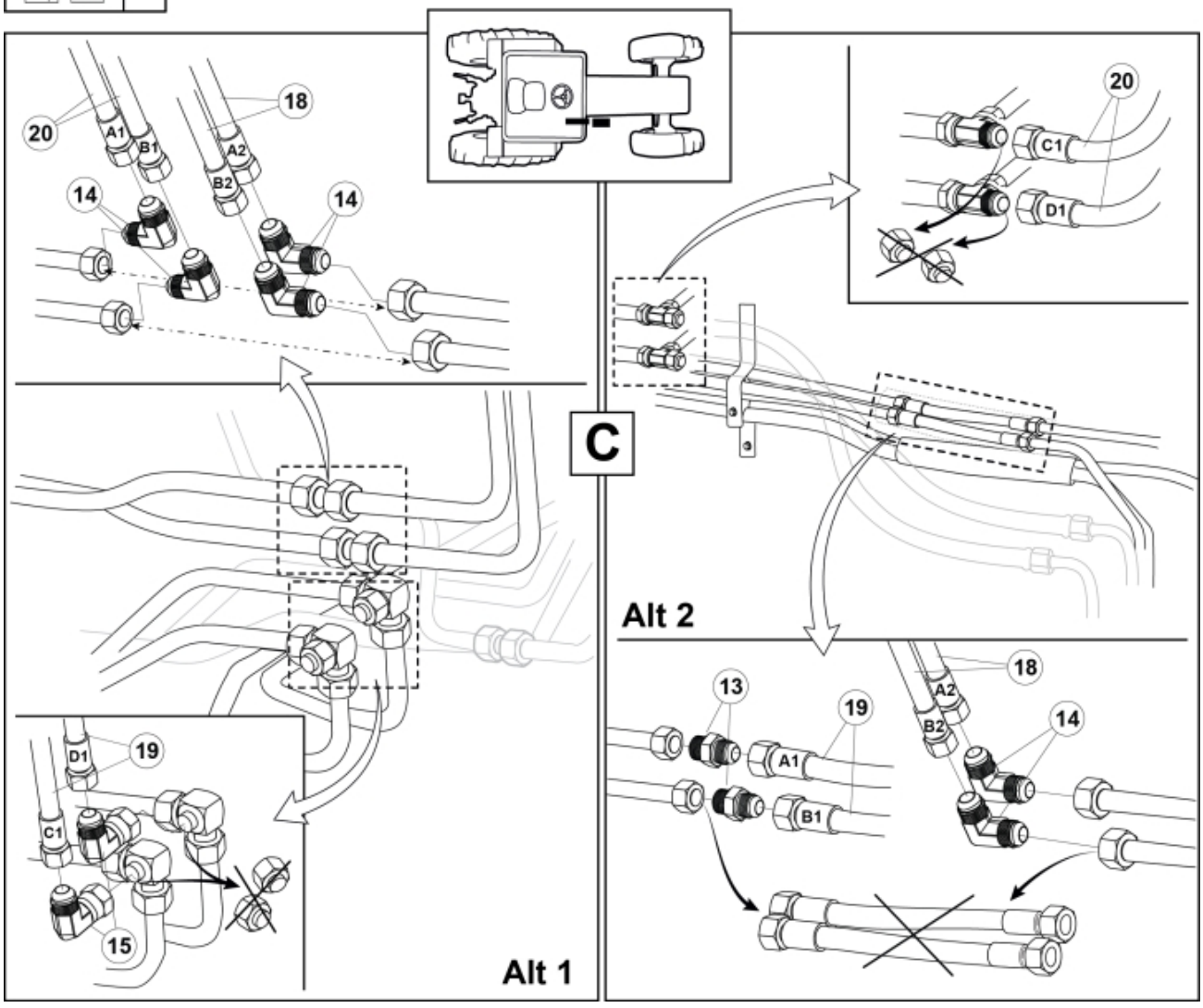

© 2025 Jost

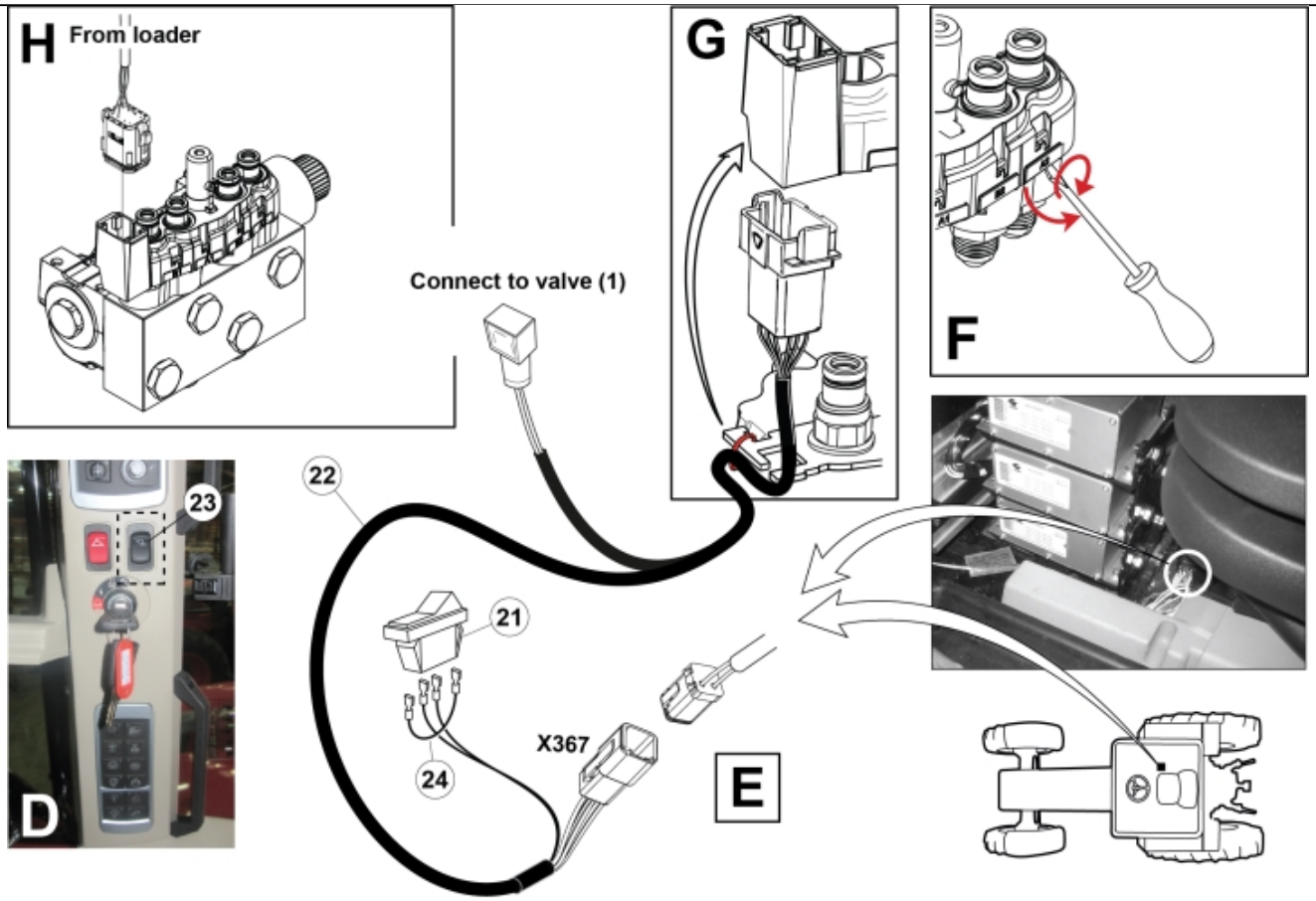
H
From loader
Connect to valve (1)
G
F
D
E
22
23
21
24
X367

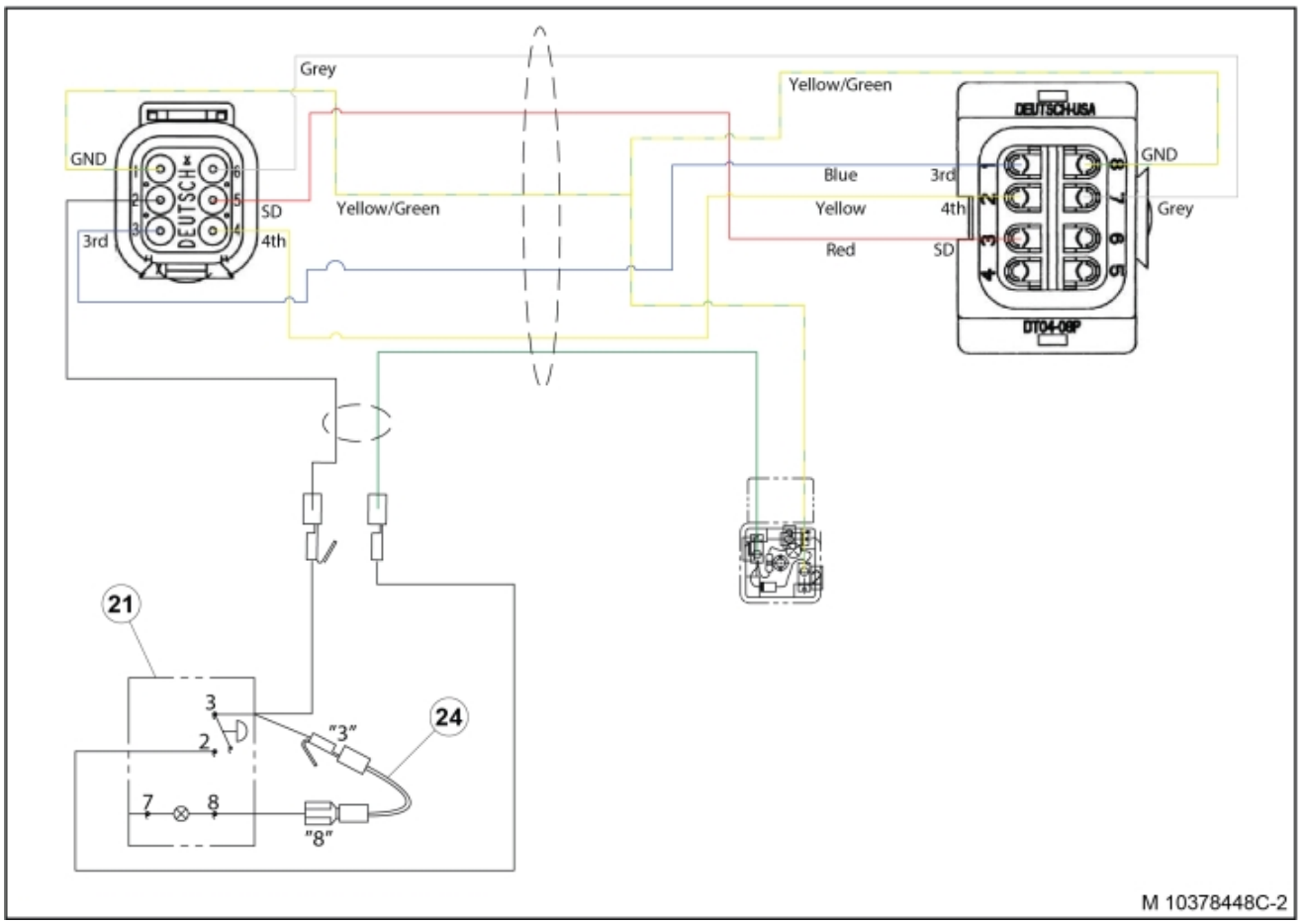
Grey
GND
SD
Yellow/Green
3rd
4th
DEUTSCH
Yellow/Green
Blue
Yellow
Red
DEUTSCH-USA
GND
Grey
DT04-08P
21
24
"3"
"8"
M 10378448C-2

© 2025 Jost

Part assemblies Hose kit

PartNo	Pos	Qty	Name	Specifications
10378448C		1 PCS	Hose kit	
5034265	1	1 PCS	Control valve	
60013480	2	1 PCS	Bracket	
5005999	3	2	Screw	M6SF M10X45
10415890	4	1	Bracket	
5006000	5	4	Screw	M6SF M8X20 (8,8)
5006031	6	3	Screw	M6SF M8X35 (8.8)
5011921	7	3	Nut	M6MF M8
11134370	8	1	Decal	
11135173	9	1	Decal	
5028095	10	4	Hollow screw	M22x38
5013905	11	8	Washer	Tredo 122
5027928	12	2	Adaptor	7/8” UNF JIC-M22x1,5
5027505	13	2	Adaptor	M22x1,5
5027848	14	4 PCS	Adaptor	M22x1,5- M22x1,5 90°
5027939	15	2	Adaptor	M22x1,5 - M22x1,5
60003385	16	2	Plug	M22x1.5
5033606	17	8	Cable tie	7,5 x 385
5050503	18	2 PCS	Hose	1/2" L=1500 M22MLRLM - 7/8RLM
5050576	19	2 PCS	Hose	1/2" L=1500 M22LMRLM - M22BANJO
5050577	20	2 PCS	Hose	1/2" L=1800 M22MLRLM - M22BANJO
5103004	21	1	Switch	
60010698	22	1 PCS	Harness	
60013456	23	1	Switch	
5102014	24	1	Cable	

© 2025 Jost