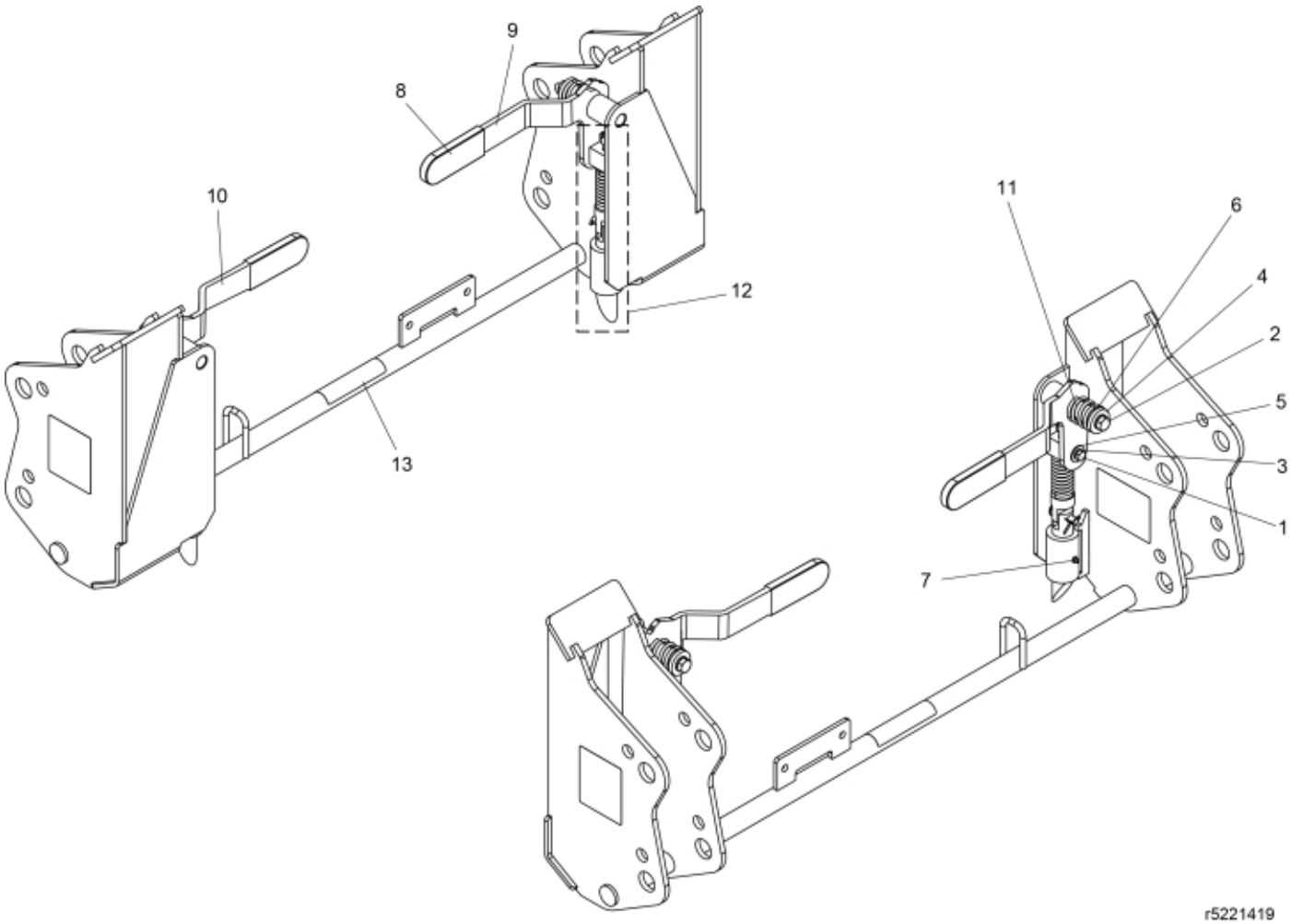

© 2025 Jost

Description	Tool carrier
Part assemblies	Skid Steer

PartNo	Pos	Qty	Name	Specifications
5221419-19		1 PCS	Skid Steer	
5002052	1	2	Screw	M6S M8x25
5002103	2	2	Screw	M12 x 35
5013404	3	2	Spring washer	8,1x14,8x2
5013408	4	2	Spring washer	FBB 12,2 x 21,1 x 2,5
5013916	5	2	Washer	8,4x24x2
5013924	6	2	Washer	13x36x6
5021901	7	2	Grease fitting	M6
5022144	8	2	Cover	
5221533	9	1	Handle LH	
5221534	10	1	Handle RH	
5221539	11	2	Spring	
5221580	12	2 PCS	Pin cpl.	
5221409-19	13	1 PCS	Tool carrier	MF Red

© 2025 Jost