60013268
11254051
11254066
11254069
11254072

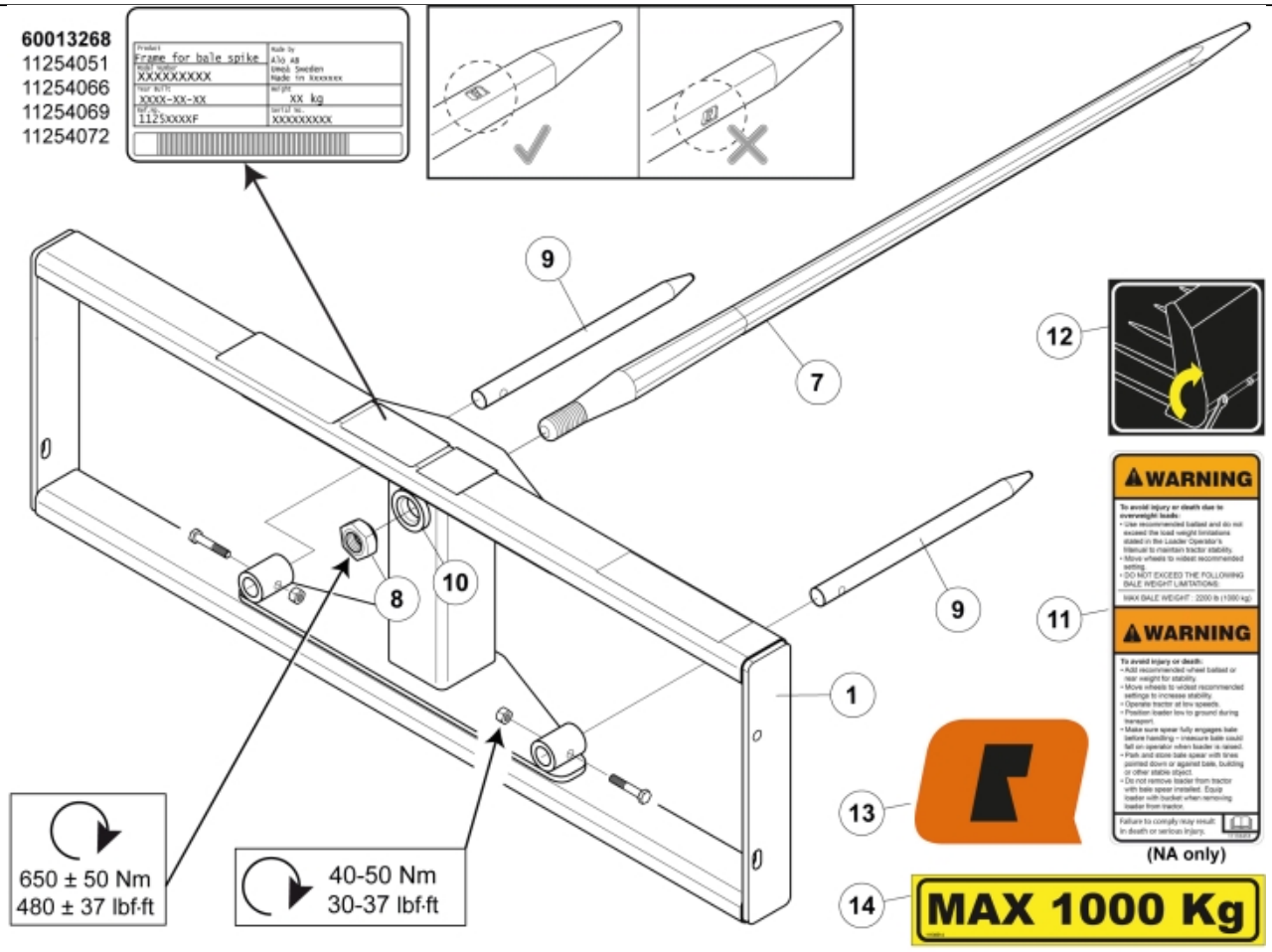

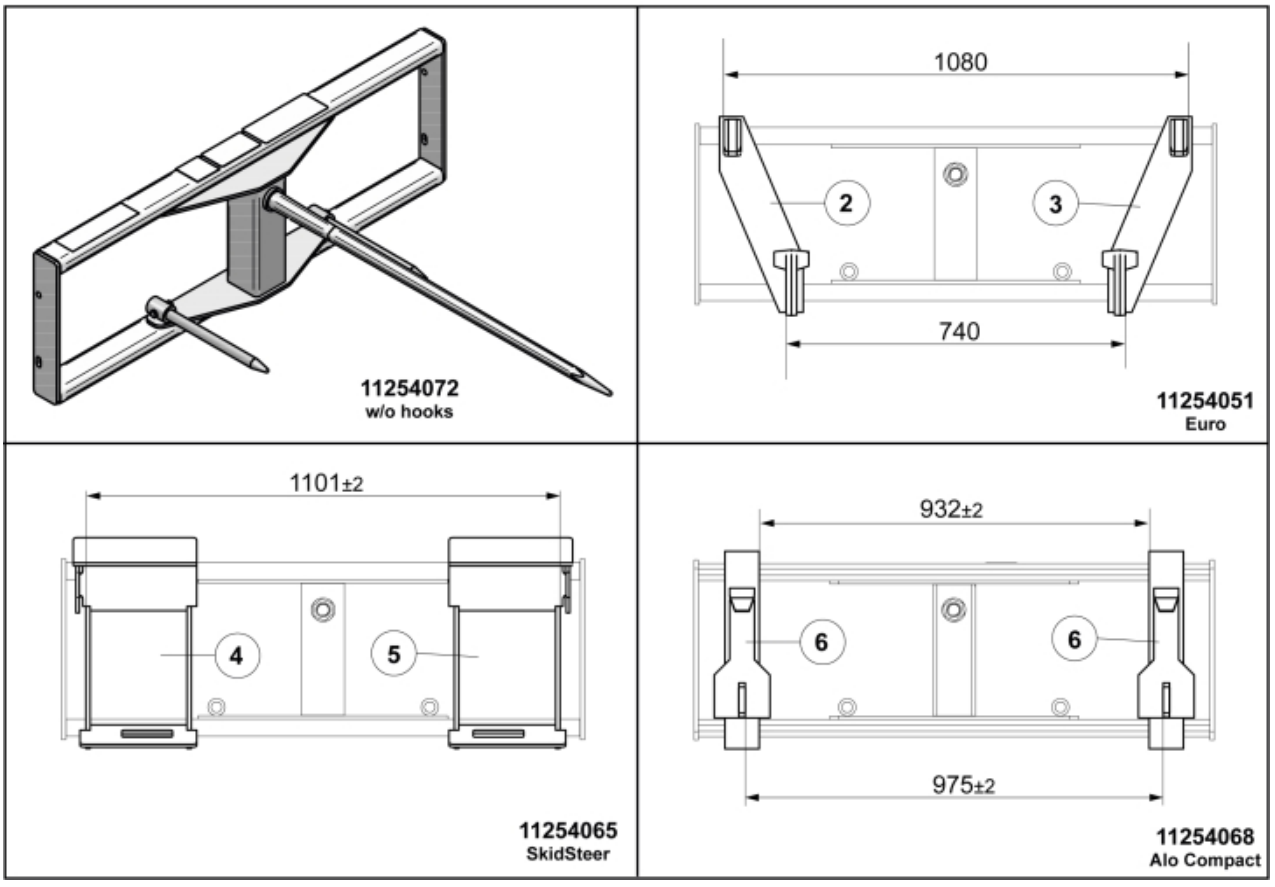

© 2025 Jost

Part assemblies	Bale Spike 2016 Alo Compact
Specification	Year From: 1/1/2016 12:00:00 AM

PartNo	Pos	Qty	Name	Specifications
11254068			Bale Spike 2016 Alo Compact	1/1/2016 12:00:00 AM
11254067	1	1	Frame	Bale Spike Alo Compact
11252212	6	2 PCS	• Implement hook	Alo Compact
5068120-17	7	1	Tine with nut	L=1240mm (5068004)
5068116	8	1	• Nut	Conus 2
60013306	9	2 PCS	Tine cpl.	L=380mm
1209699	10	1	Sleeve	
11136453	11	1 PCS	Warning decal	Only for North Am.
11136517	12	1	Warning decal	"Tightening of tine"
60049053	13	1	Decal	"Q" small 80x57
11136514	14	1	Warning decal	"Max 1000 kg"

© 2025 Jost