M 14331323

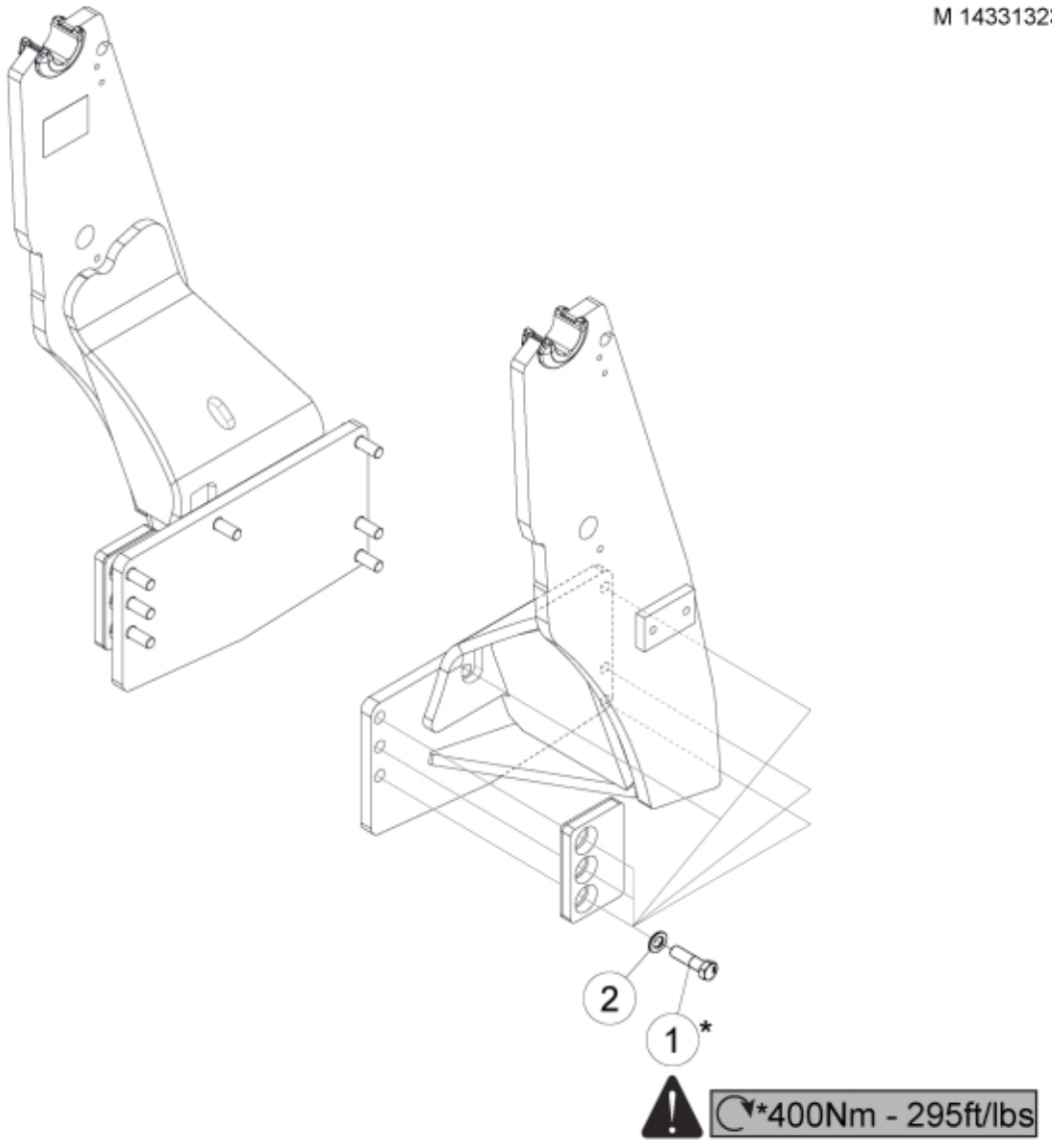

© 2025 Jost

Part assemblies Field Service kit

PartNo	Pos	Qty	Name	Specifications
14331323		1 PCS	Field Service kit	
5050545	1	14	Screw	M6S M20x2,5x75 (10.9) Geomet (RED)
5050552	2	14 PCS	Washer	BRB 20.6x37.3x3.1 350-440HV

© 2025 Jost