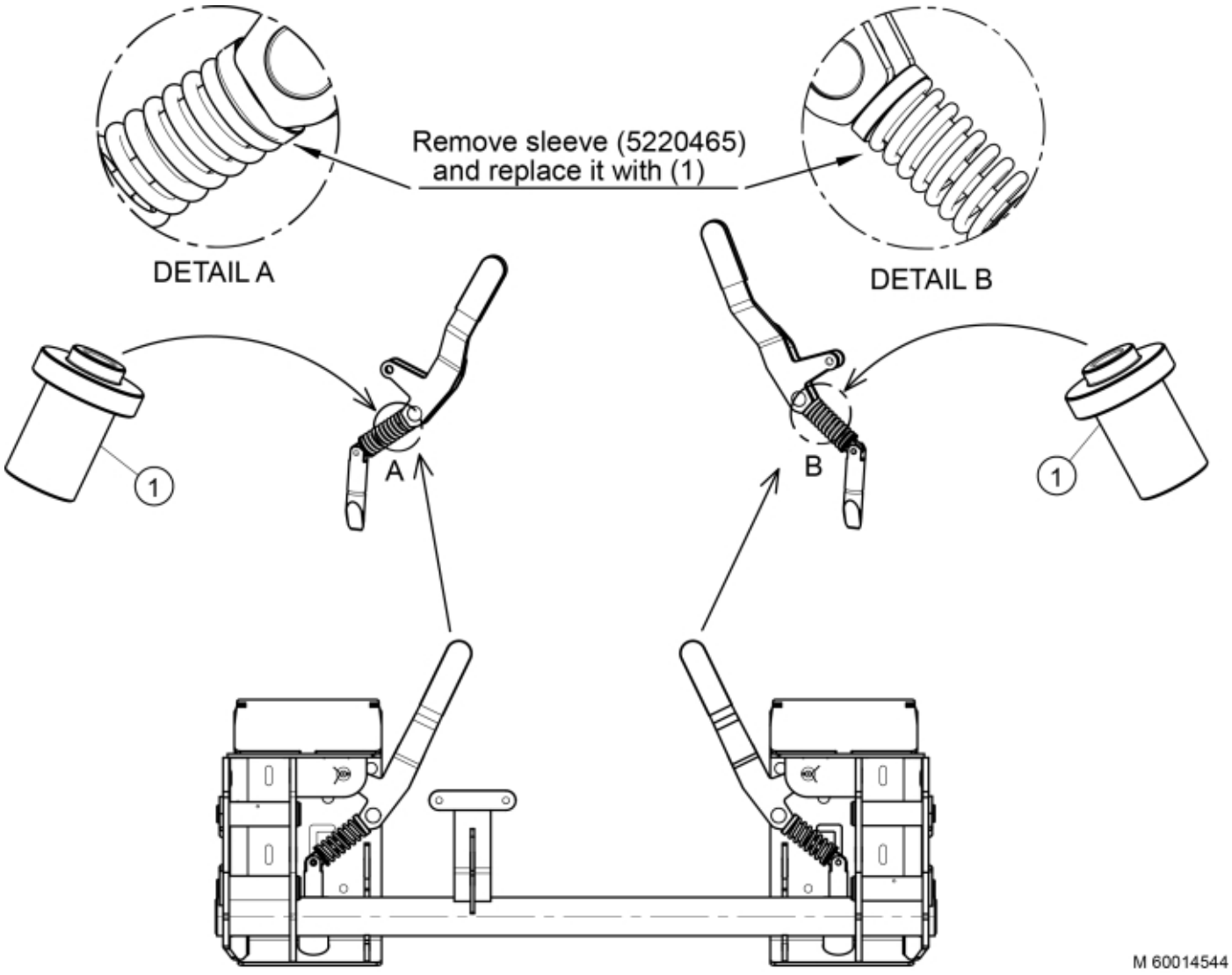
Remove sleeve (5220465)
and replace it with (1)
DETAIL A
DETAIL B
A
B
1
1
M 60014544

© 2025 Jost

Description	Skid Steer
Part assemblies	Sleeve kit
Specification	Specification: Skid Steer

PartNo	Pos	Qty	Name	Specifications
60014544		1 PCS	Sleeve kit	Skid Steer
60010413	1	2	Sleeve	

© 2025 Jost