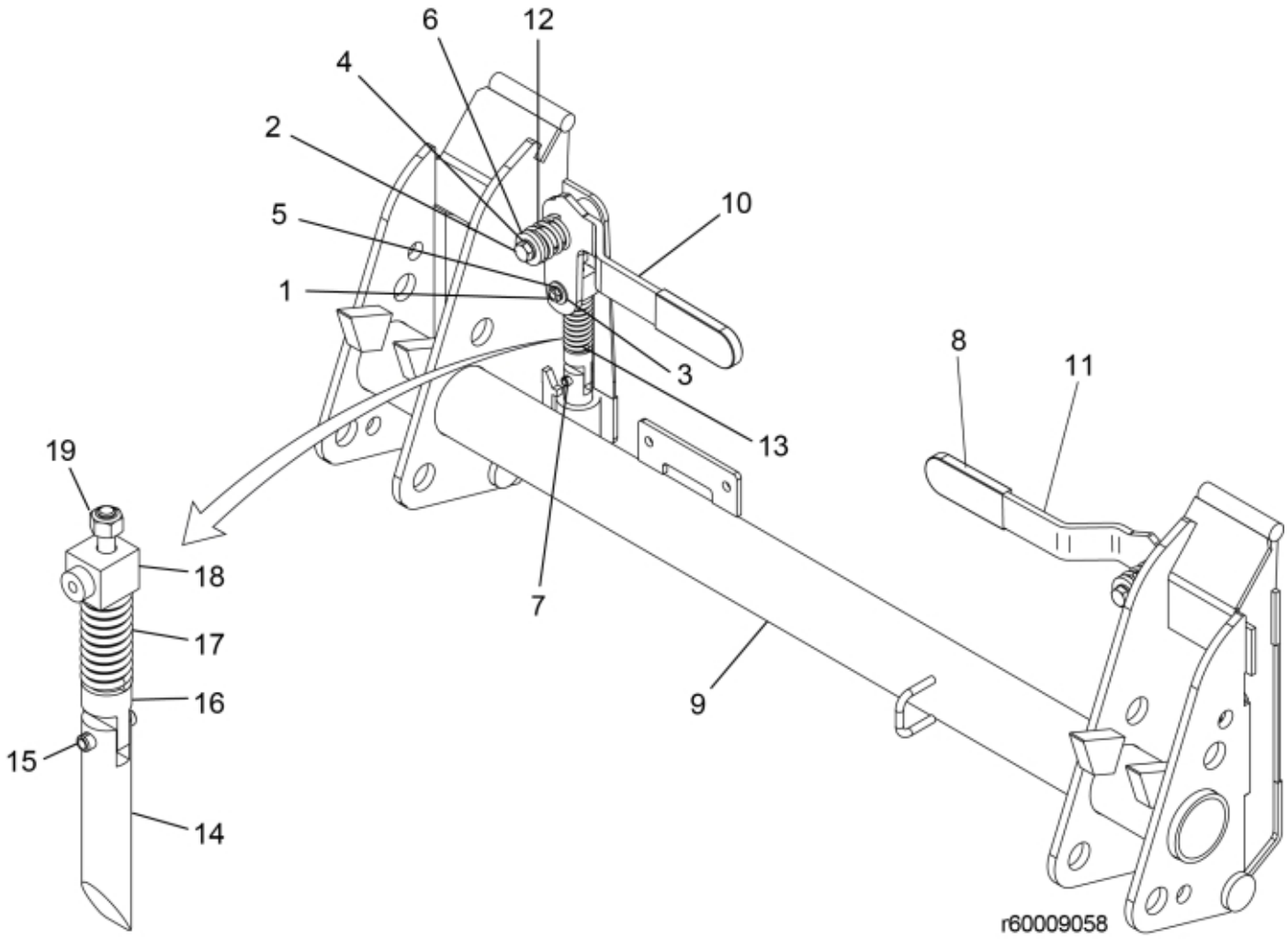

© 2025 Jost

Description	Tool carrier
Part assemblies	Skid Steer
Specification	Specification: New Holland Blue
	Year From: 1/1/2017 12:00:00 AM

PartNo	Pos	Qty	Name	Specifications
60009058-11		1	Skid Steer	New Holland Blue, 1/1/2017 12:00:00 AM
5002051	1	2	• Screw	M6S 8 x 20
5002103	2	2	• Screw	M12 x 35
5013404	3	2	• Spring washer	8,1x14,8x2
5013408	4	2	• Spring washer	FBB 12,2 x 21,1 x 2,5
5013916	5	2	• Washer	8,4x24x2
5013924	6	2	• Washer	13x36x6
5023005	7	2	• Greaser	M 10 x 1
5022144	8	2	• Cover	
60009059-11	9	1	• Tool carrier	New Holland Blue
5221533	10	1	• Handle LH	
5221534	11	1	• Handle RH	
5221539	12	2	• Spring	
60009527	13	2 PCS	• Pin cpl.	
60009534	14	1 PCS	•• Pin	
5016996	15	1	•• Pin	
60009533	16	1 PCS	•• Rod	
5221538	17	1 PCS	•• Spring	
60009694	18	1 PCS	•• Lug	
5011554	19	1	•• Nut	Loc-King M10

© 2025 Jost