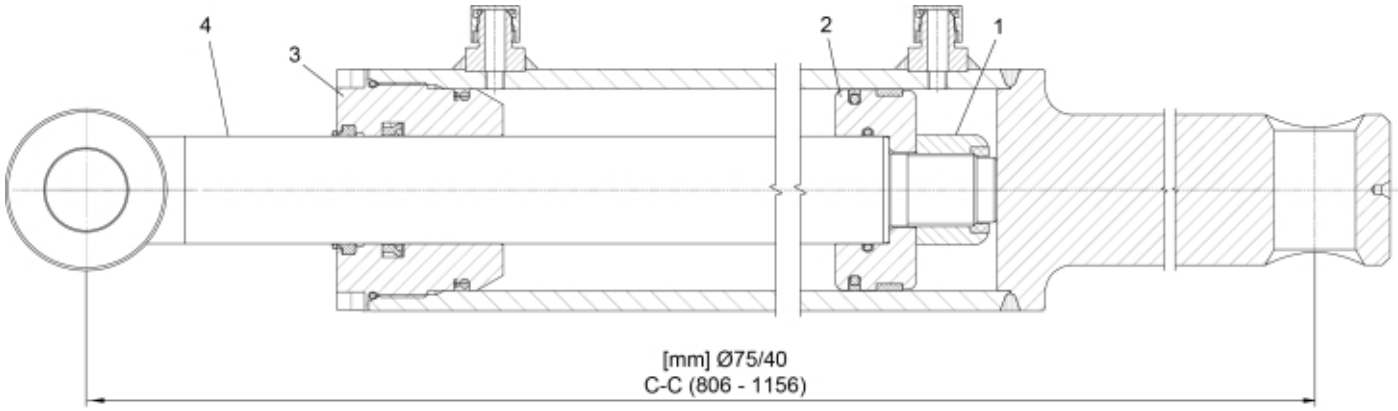

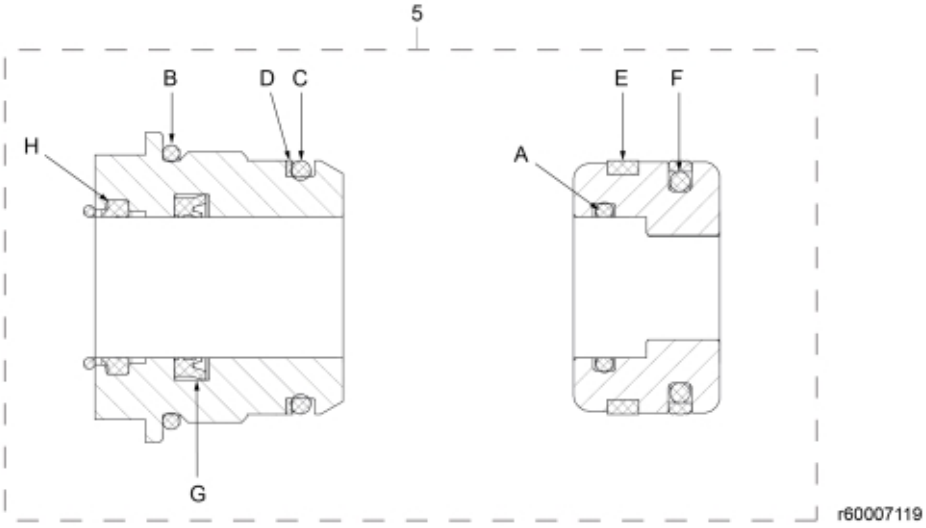

© 2025 Jost

Description	75/40
Part assemblies	Cylinder
Specification	Specification: Glossy Black (12722710)

PartNo	Pos	Qty	Name	Specifications
60015155	1	1	Locking nut	
60015148	2	1	Piston	
60015143	3	1 PCS	Bearing	
60015190	4	1	Piston rod	
60010529	5	1	Seal kit	
60013742	A	1	• O-ring	
60013741	B	1	• O-ring	
60013740	C	1	• O-ring	
60013739	D	1	• Support Ring	
60013738	E	1	• Wear ring	
60013737	F	1	• Piston seal	
60013736	G	1	• Seal kit	
60013735	H	1	• Wiper	

© 2025 Jost