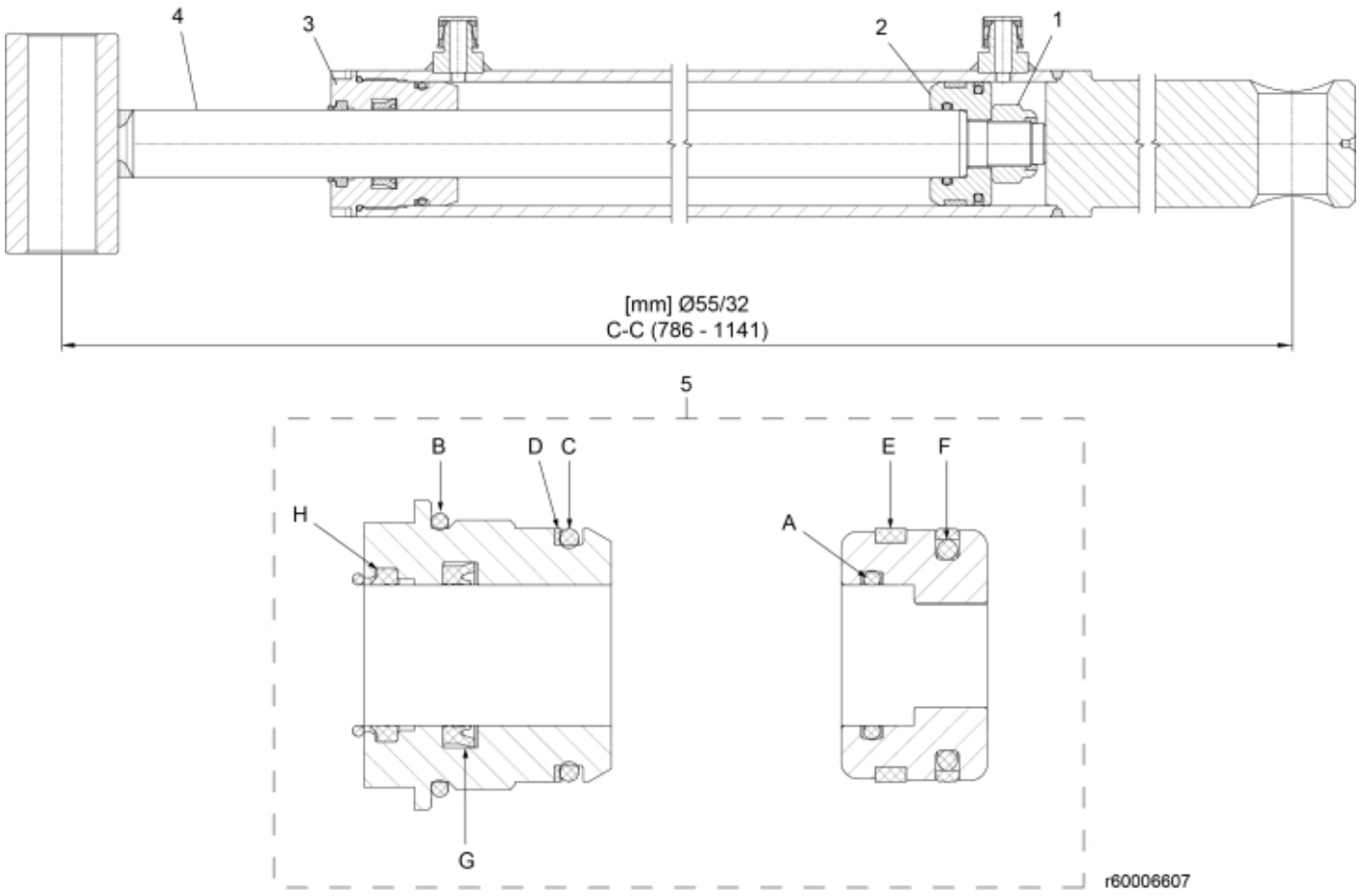

© 2025 Jost

Description	55/32
Part assemblies	Cylinder
Specification	Specification: Glossy Black (12725710)

PartNo	Pos	Qty	Name	Specifications
60015154	1	1	Locking nut	
60015147	2	1	Piston	
60015142	3	1 PCS	Bearing	
60015182	4	1	Piston rod	
60010523	5	1	Seal kit	
60011382	A	1	• O-ring	
60011381	B	1	• O-ring	
60011380	C	1	• O-ring	
60011379	D	1	• Support Ring	
60011378	E	1	• Wear ring	
60011377	F	1	• Piston seal	
60011376	G	1	• Seal kit	
60011375	H	1	Wiper	

© 2025 Jost