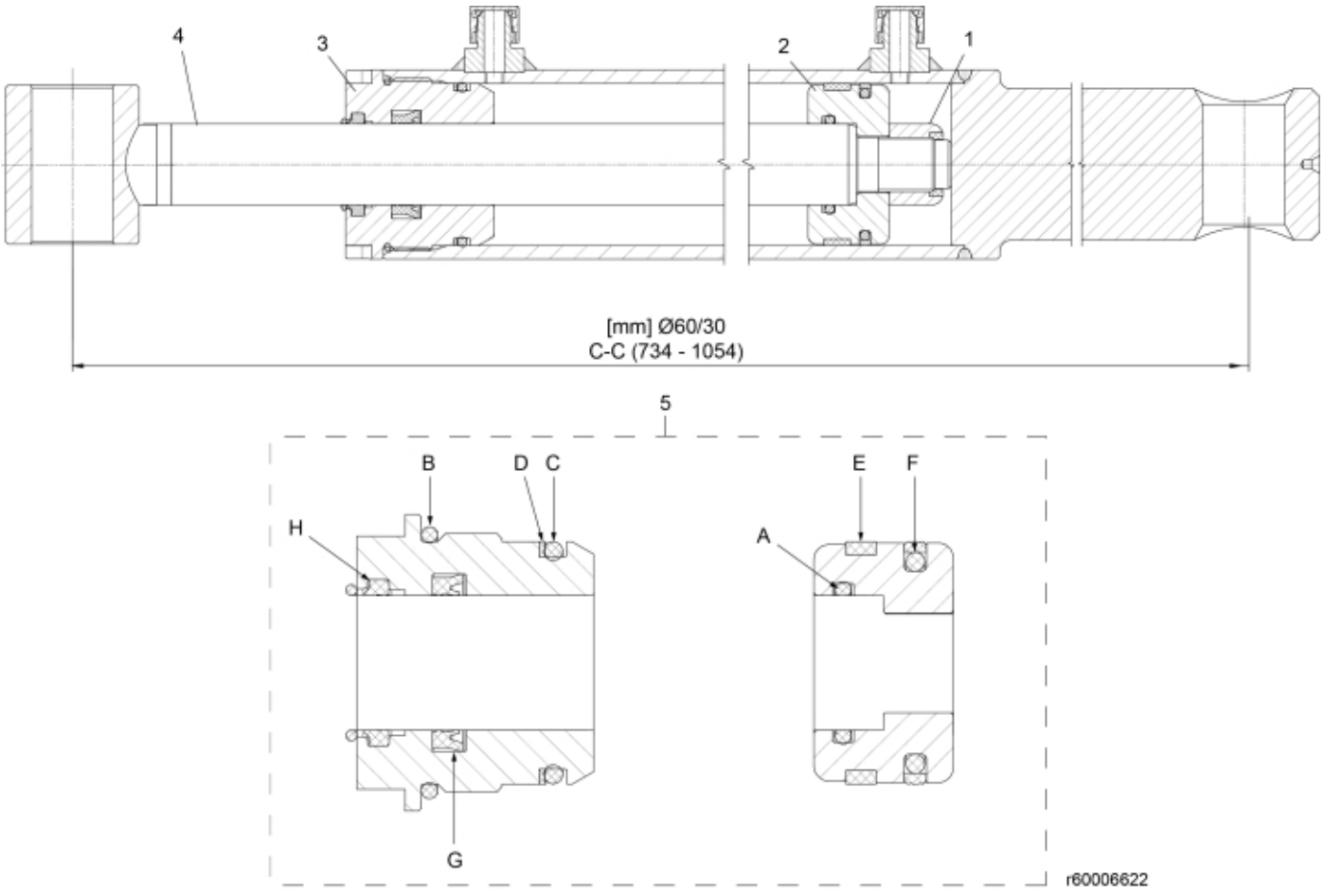

© 2025 Jost

Description	60/30
Part assemblies	Cylinder
Specification	Specification: Glossy Black (12726710)

PartNo	Pos	Qty	Name	Specifications
60015154	1	1	Locking nut	
60015152	2	1 PCS	Piston	
60015146	3	1 PCS	Bearing	
60015185	4	1	Piston rod	
60010527	5	1	Seal kit	
60011382	A	1	• O-ring	
60013785	B	1	• O-ring	
60013784	C	1	• O-ring	
60013783	D	1	• Support Ring	
60013782	E	1	• Wear ring	
60013781	F	1	• Piston seal	
60011376	G	1	• Seal kit	
60011375	H	1	• Wiper	

© 2025 Jost