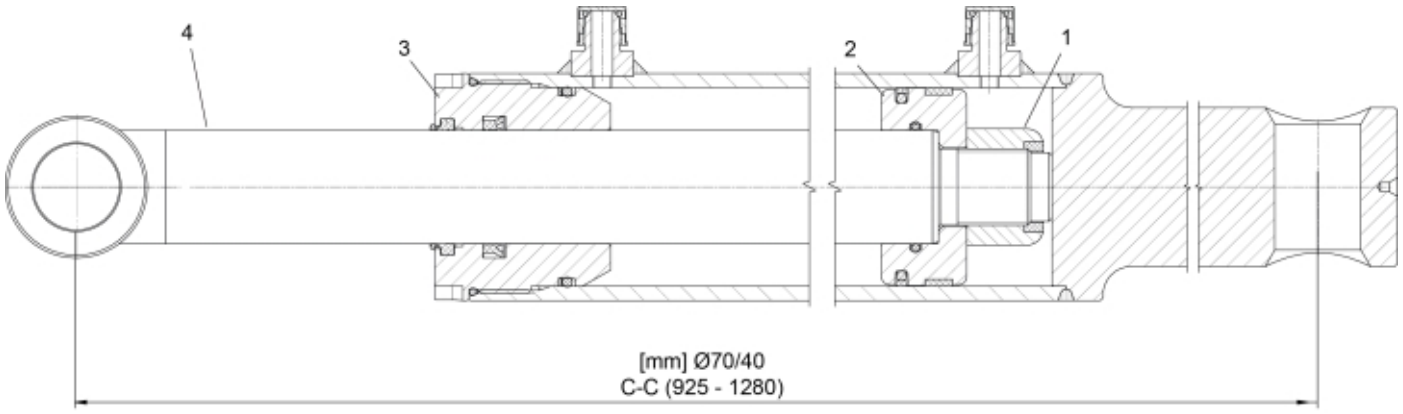

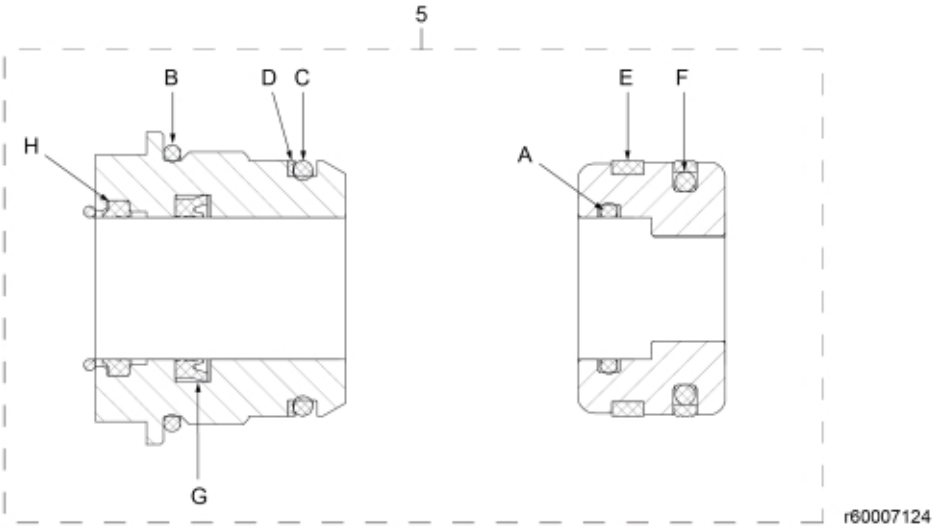

© 2025 Jost

Description	70/40
Part assemblies	Cylinder
Specification	Specification: Glossy Black (12726810)

PartNo	Pos	Qty	Name	Specifications
60015155	1	1	Locking nut	
60015149	2	1	Piston	
60015144	3	1 PCS	Bearing	
60015189	4	1	Piston rod	
60010528	5	1	Seal kit	
60013742	A	1	• O-ring	
60013779	B	1	• O-ring	
60013778	C	1	• O-ring	
60013777	D	1	• Support Ring	
60013774	E	1	• Wear ring	
60013771	F	1	• Piston seal	
60013736	G	1	• Seal kit	
60013735	H	1	• Wiper	

© 2025 Jost