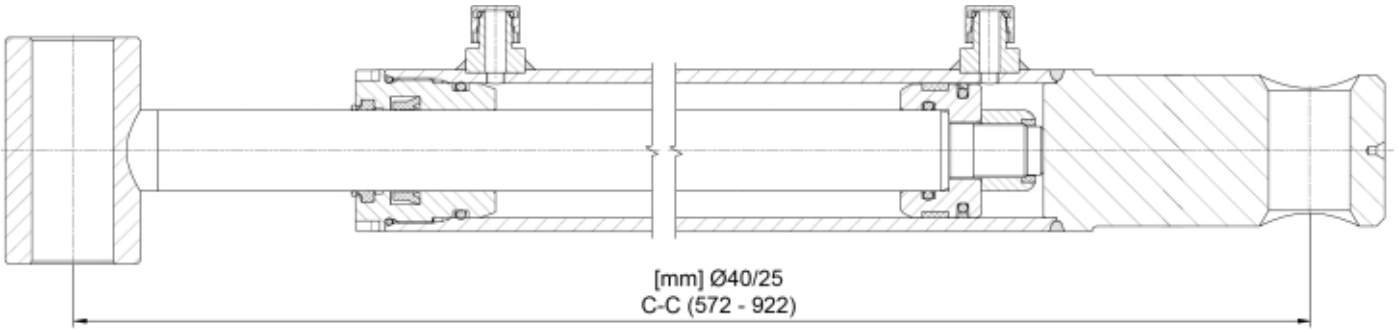


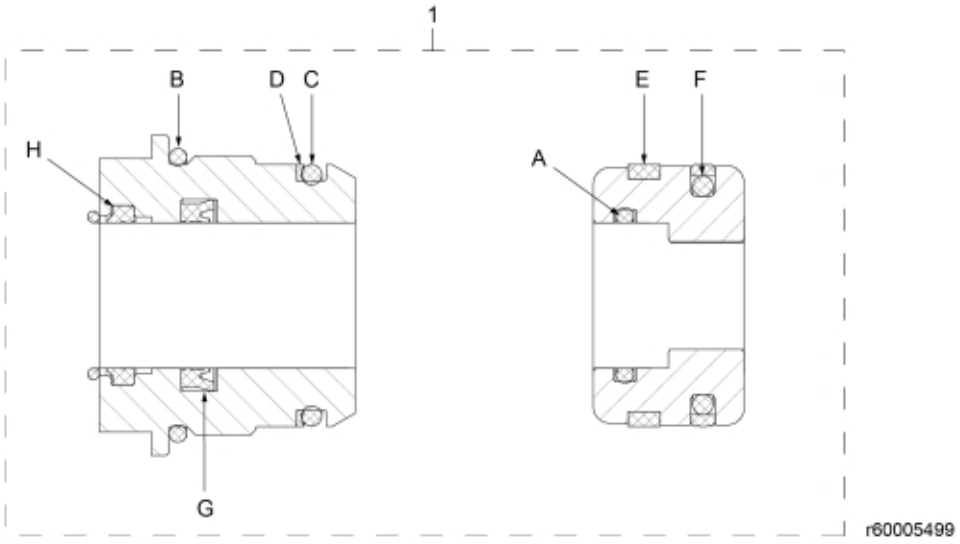



© 2025 Jost

| | |
|---|---|
| **Description** | 40/25 |
| **Part assemblies** | Cylinder |
| **Specification** | Specification: Glossy Black (12724310) |

| PartNo | Pos | Qty | Name | Specifications |
|---|---|---|---|---|
| 60010526 | 1 | 1 | Seal kit | |
| 60011076 | A | 1 | • O-ring | |
| 60011075 | B | 1 PCS | • O-ring | |
| 60011074 | C | 1 | • O-ring | |
| 60011073 | D | 1 | • Support Ring | |
| 60011072 | E | 1 | • Wear ring | |
| 60011070 | F | 1 | • Piston seal | |
| 60011080 | G | 1 | • Seal kit | |
| 60011079 | H | 1 | • Wiper | |


© 2025 Jost