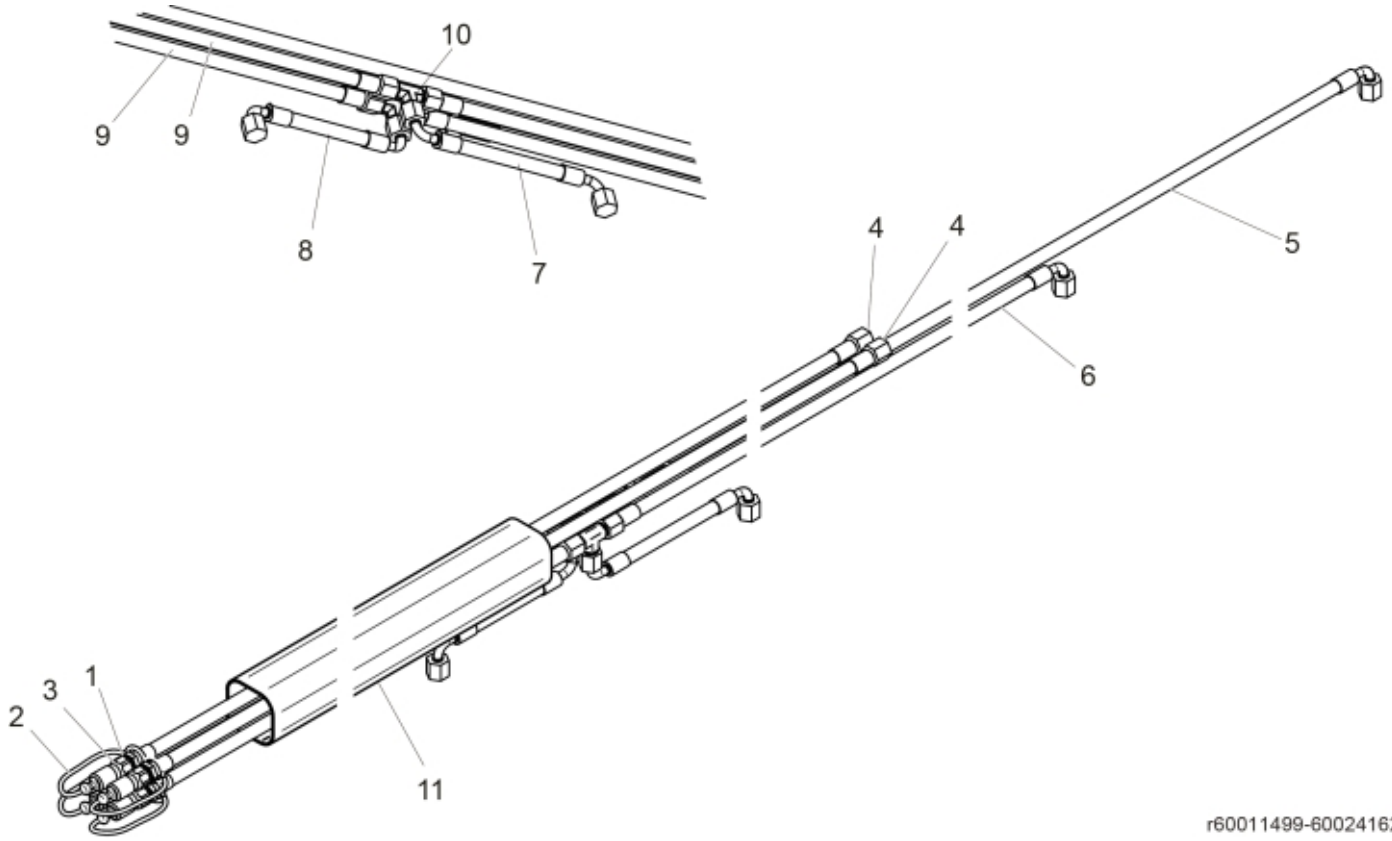

r60011499-60024162

© 2025 Jost

Part assemblies Main hose kit

PartNo	Pos	Qty	Name	Specifications
5013856	1	4	Dowty washer	Tredo 1/4"
5034384	2	4	Dust Cover	
5045017	3	4	Quick Coupling	R 1/4"
60006081	4	2	Hose	1/4" L=2205 (9032451)
9032452	5	1	Hose	1/4" L=2770mm
9032453	6	1	Hose	1/4" L=2340mm
9032454	7	1	Hose	1/4" L=210mm
9032455	8	1	Hose	1/4" L=180mm
60005955	9	2	Hose	1/4" L=875mm (9032456)
5028077	10	1	Adaptor	
9032490	11	1	Hose cover	

© 2025 Jost